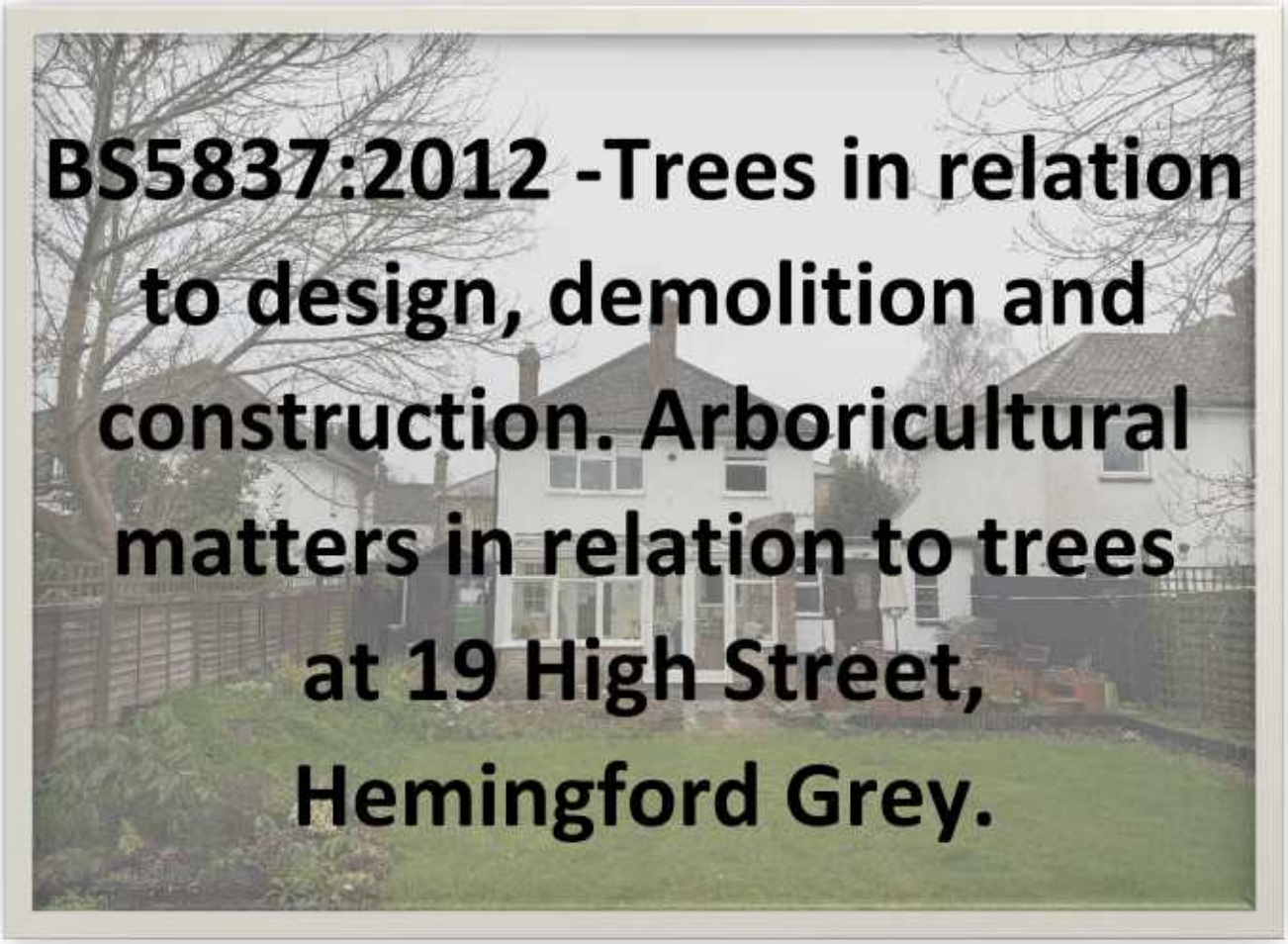

BS5837:2012 -Trees in relation to design, demolition and construction. Arboricultural matters in relation to trees at 19 High Street, Hemingford Grey.

Prepared by: East Midlands Tree Surveys Ltd.

Date: 13/06/2025

Limitations of use and copyright: All rights in this report are reserved. No part of it may be reproduced or transmitted, in any form or by any means, electronic, mechanical, photocopying, recording or otherwise, or stored in any retrieval system of any nature, without our written permission. Its content and format are for the exclusive use of the addressee in dealing with this site. It may not be sold, lent, hired out or divulged to any third party not directly involved in this site without the written consent of East Midlands Tree Surveys.

Contents

1. Instructions

2. Information supplied

3. Introduction

4. Planning Policy Context

5. Site description

6. Tree survey findings

7. Tree Constraints/Arboricultural Impact Assessment.

8. Arboricultural Method Statement & Tree Protection detail.

8.1 Sequenced Methods of Demolition, Construction and Tree Protection

8.2 Tree protection measures.

8.2 Mixing of concrete around trees. (cementitious, mortar, cement, slurry)

Appendix 1. Tree survey data

Appendix 2. Tree Constraints/AIA & TPP

Appendix 3. Fence specification.

Appendix 4. Signs.

Appendix 5. Tree survey

Appendix 6. Legal Constraints

Appendix 7. Arboricultural considerations in relation to development.

Rooting structure

Typical rooting structure of a tree

How can trees be damaged?

Appendix 8. Biosecurity advice

1. Instructions

This report was commissioned by TMV with instruction to carry out an inspection of trees located at the above address in line with *BS5837:2012 Trees in relation to design, demolition and construction - Recommendations.*

The objectives of this report are as follows:

1. To make an assessment of the trees' condition and identify any faults.
2. To provide Tree Constraints along with recommendations in line with BS5837:2012.
3. To provide an Arb Impact Assessment with tree protection measures and an Arb Method Statement in line with BS5837:2012.

2. Information supplied

EMTS were supplied with the following documents.

Title	Format	Provider
1201_Site Location and Block Plan_Trees	DWG	TMV

Our plans are based on the above DWG files which were imported into our mapping software for revision.

A topo was not provided, the tree positions were measured from fixed points, triangulated and added to the CAD drawing layout.

3. Introduction

This document has been prepared to fulfil the requirements for the proposal in accordance with the Department for Communities and Local Government guidance on information requirements and validation and is set out in compliance with British Standard 5837 Trees in relation to design, demolition and construction recommendations 2012.

The initial tree survey is considered to be compliant with BS5837:2012.

All trees considered likely to be affected by the proposal were surveyed and the details are given in Appendix 1 Table.

A copy of the proposed layout has been provided.

Whilst the plan within this report is to scale in terms of visual presentation, it is not possible to measure within each plan, if scaled plans are required, these can be obtained from the project architect.

The tree numbers referred to in this report are the same as shown on the tree survey schedule and plan.

Only those trees directly implicated by the proposed installation have been assessed.

Due to the low numbers of trees and accuracy of the topo, no tags were affixed.

This report addresses the arboricultural issues relating to the proposed development at the above site and identifies the arboricultural implications of the proposed development with a view to protecting the trees during the construction works by setting out the tree protection methods, construction techniques and working practices that are to be adopted on this site.

If all the guidelines and principles outlined in this report are not adhered to, as with all development sites, there is a risk that the construction activities will result in damage to and potentially the death of the retained trees. Damage to the trees will significantly increase the risk of their health declining and may increase the risk of their complete or partial failure.

The success of the recommendations set out in this report is dependent on the development adhering to the principles set out within, which are to be approved and enforced by the Local Planning Authority (LPA). If the recommendations contained within this document are acceptable to the LPA, then it is suggested that they be controlled by standard planning conditions.

This report has been prepared to meet planning requirements and as such is not considered to be a condition survey, any obvious actionable defects will however be picked up as part of the assessment.

4. Planning Policy Context

National and Local Planning Policy

4.1 National Planning Policy Framework (NPPF) Dec 2024 reflects the Government's vision for a planning system that puts beautiful, environmentally sustainable, and life-enhancing places at its heart. The NPPF recognises that the natural environment is an essential component of the health and wellbeing of society, and in achieving well designed places.

4.2 Paragraph 136: trees make an important contribution to the character and quality of urban environments and can also help mitigate and adapt to climate change. Planning policies and decisions should ensure that new streets are tree lined, that opportunities are taken to incorporate trees elsewhere in developments, that appropriate measures are in place to secure long – term maintenance of newly planted trees, and that existing trees are retained wherever possible.

4.3 Paragraph 159 a): advises that new development should be planned for in ways that avoid increased vulnerability to the range of impacts arising from climate change. When new development is brought forward in areas which are vulnerable, care should be taken to ensure that risks can be managed through suitable adaption measures, including through the planning of green infrastructure.

4.4 Paragraph 180 b): Planning policies and decisions should contribute to and enhance the natural and local environment by recognizing the intrinsic character and beauty of the countryside, and the wider benefits from natural capital and ecosystem services – including the economic benefits of the best and most versatile agricultural land, and of trees and woodland.

4.5 Paragraph 186 a) and c): when determining planning applications, local planning authorities should apply the principles of avoidance, minimise, remediate or, as a last resort compensate for the harmful impacts of development on for example biodiversity, and irreplaceable habits (such as ancient woodland and ancient and veteran trees).

4.6 Growth for communities delivered by the planning system requires the careful consideration of our natural environment during the design and development process to achieve sustainable development and this report considers how the development complies with the NPPF and how it achieves sustainable development.

4.7 Local Planning Authorities are governed in their decision-making process by the principle of sustainable development.

5. Site description

The site consists of an existing dwelling with paved patio to the rear, leading to the garden, the 2 trees surveyed are offsite to the left and right of the garden.

6. Tree survey findings

The tree details can be found at Appendix 1.

The trees are both offsite and although they are assessed as reasonable specimens they provide low visual benefits in terms of the immediate local landscape.

No significant defects were noted.

7. Tree Constraints/Arboricultural Impact Assessment.

The Tree Constraints/AIA can be found at Appendix 2.

Physical build footprint.

The proposed layout shows that the proposed build is outside the RPAs of both trees.

Due to the existing crown clearances, there will be no need for pruning.

8. Arboricultural Method Statement & Tree Protection detail.

8.1 Sequenced Methods of Demolition, Construction and Tree Protection

With reference to relevant published guidance, the methodology of this statement follows a logical sequence essential to the efficacy of the protection measures. Reference may include: British Standard BS 5837:2012 Trees in relation to design, demolition and construction – Recommendations; British Standard BS3998:2010 Tree Work. It is essential to the successful implementation of the principles set out in this document that effective supervision and enforcement are put in place from the outset.

8.2 Tree protection measures.

The appointed Main Contractor will communicate to the appointed contractors and any subsequent subcontractors, the projected extents of the RPAs of the retained trees, having particular regard to those retained trees where anticipated landscaping incursions within their projected RPAs, are anticipated and/or protection measures are required.

Within site, the RPAs will be marked clearly on the ground, using a non-toxic line marking paint, the extents of the projected RPAs as per the survey data in Appendix 1 of the Tree Constraints Report and the locations of the tree protection measures, as per the Tree Protection Plan (TPP).

Hard, to scale copies of the TPP will be retained by the Project/Site Manager and used to help communicate this aspect.

The TPP can be found at Appendix 2 and run from boundary to boundary protecting the RPAs.

All materials will be stored on the existing house drive.

The fencing shall remain in place throughout construction and be removed only after completion of all works.

The default specification as per figure 2 of BS 5837:2012 will be used - see Appendix 3, in order to minimise the risk of damage to roots.

Within the fenced zone, no materials or chemicals should be stored at any time, no fires should be lit, no pedestrian or vehicle traffic, and level changes within these areas should be kept to an absolute minimum. Every effort should be taken to protect a maximum possible area of the root system.

Clear notices are to be fixed to the outside of the fencing with words such as

'TREE PROTECTION AREA – NO ACCESS OR WORKING WITHIN THIS AREA'.

See Appendix 4. These notices shall be A3 in size, laminated and fixed to the fencing using suitable aids such as tie wires.

8.2 Mixing of concrete around trees. (cementitious, mortar, cement, slurry)

Washout wastewater is caustic and considered corrosive, with a pH over 12. Wet concrete is toxic to trees and for this reason the incorporation of protection (sheathing with impermeable membrane e.g. heavy grade polythene sheeting) is extremely important to prevent contact with exposed roots and limiting potential for harm.

It is important NOT to mix concrete within the vicinity of trees where there is the risk of contamination of the soil.

An arboriculturist should be consulted where required during the construction process to address any issues that might arise regarding tree retention, protection, and management. It is the responsibility of the site owner, manager, and main contractor to ensure that any tree protection or other relevant planning conditions, or TPO's are adhered to. A breach of a planning condition or TPO may result in enforcement action by the LA.



13/06/2025

John Wilcockson – Director, East Midlands Tree Surveys LTD.

Tech Cert (Arbor A), NDF For

Appendix 1 - Tree Survey Data



BS5837 Report
TMV Architects
19 High Street, Hemingford Grey

Retention Category	No. trees	Rem. Contrib.	No. trees
B	2	20+ Years	2
Total	2		

Ref.	Species	Full Structure	Measurements	Survey Notes	Retention Category	RPA	Condition	Recommendations
T001	Box elder maple *(Acer negundo)*	Tree	Height (m): 12 Stem Diam(mm): 330 Spread (m): 6N, 6E, 6S, 6W Crown Clearance (m): 3 Life Stage: Semi Mature Rem. Contrib.: 20+ Years	Offsite - Diameter estimated Offsite - unable to survey effectively due to access Trunk - codominant stems at 2m Crown - minor deadwood < 100mm Appears to be in reasonable condition Lowest crown closest to proposed development is 6m Level drop to build area of approx 1.5m with made up ground in site.	B1	Radius: 4.0m. Area: 50 sq m.	Physiological Cond: Good Structural Cond: Good Public Visual Amenity value: Low	No action required
T002	Ash *(Fraxinus sp.)*	Tree	Height (m): 16 Stem Diam(mm): 400 Spread (m): 7N, 7E, 7S, 7W Crown Clearance (m): 2 Life Stage: Semi Mature Rem. Contrib.: 20+ Years	Offsite - Diameter estimated Offsite - unable to survey effectively due to access Trunk - codominant stems at 3m Crown - minor deadwood < 100mm Appears to be in reasonable condition	B1	Radius: 4.8m. Area: 72 sq m.	Physiological Cond: Good Structural Cond: Good Public Visual Amenity value: Low	No action required

Appendix 2. Tree constraints/AIA & TPP

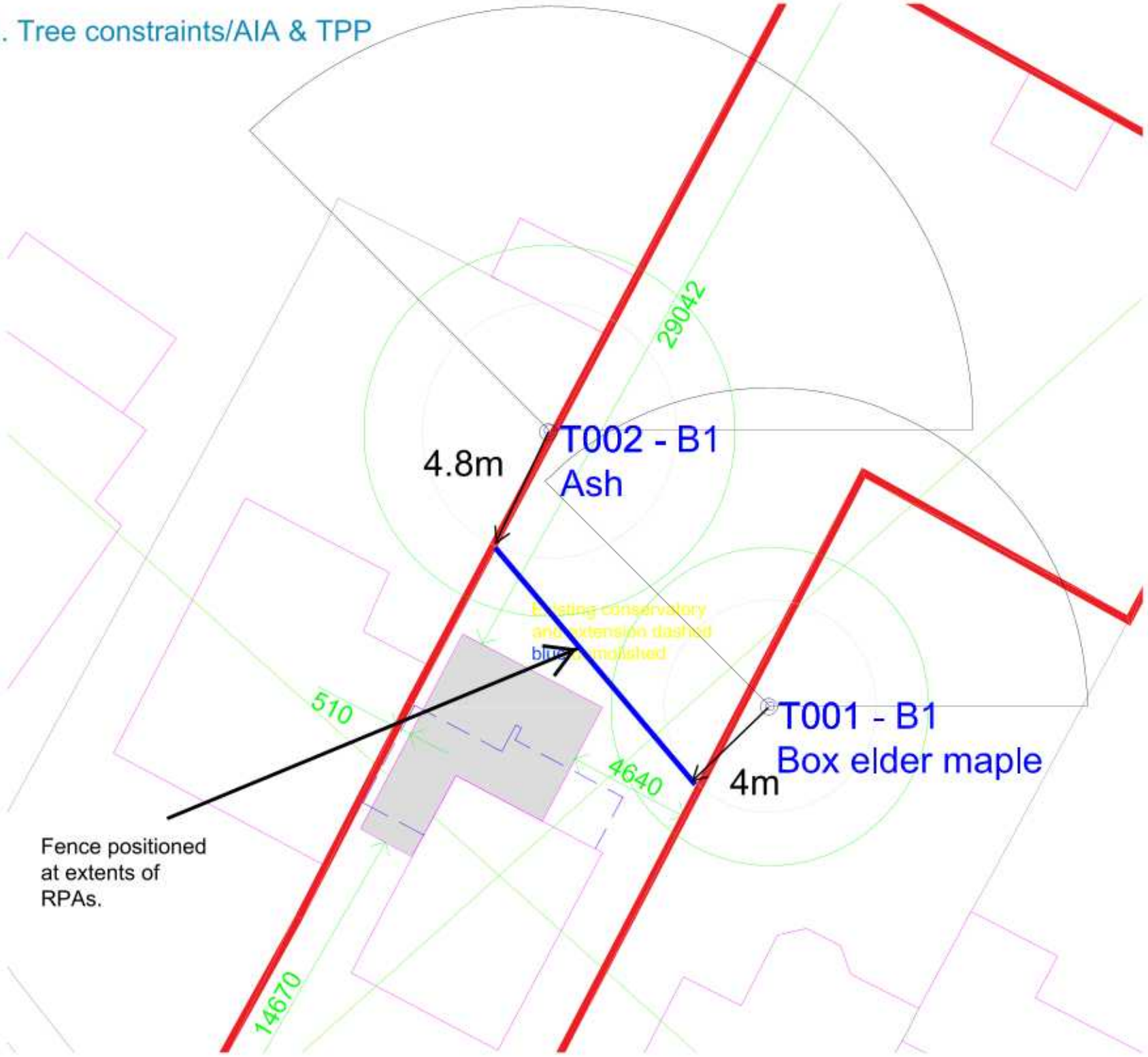

Appendix 3. Fence specification.

Figure 2 **Default specification for protective barrier**

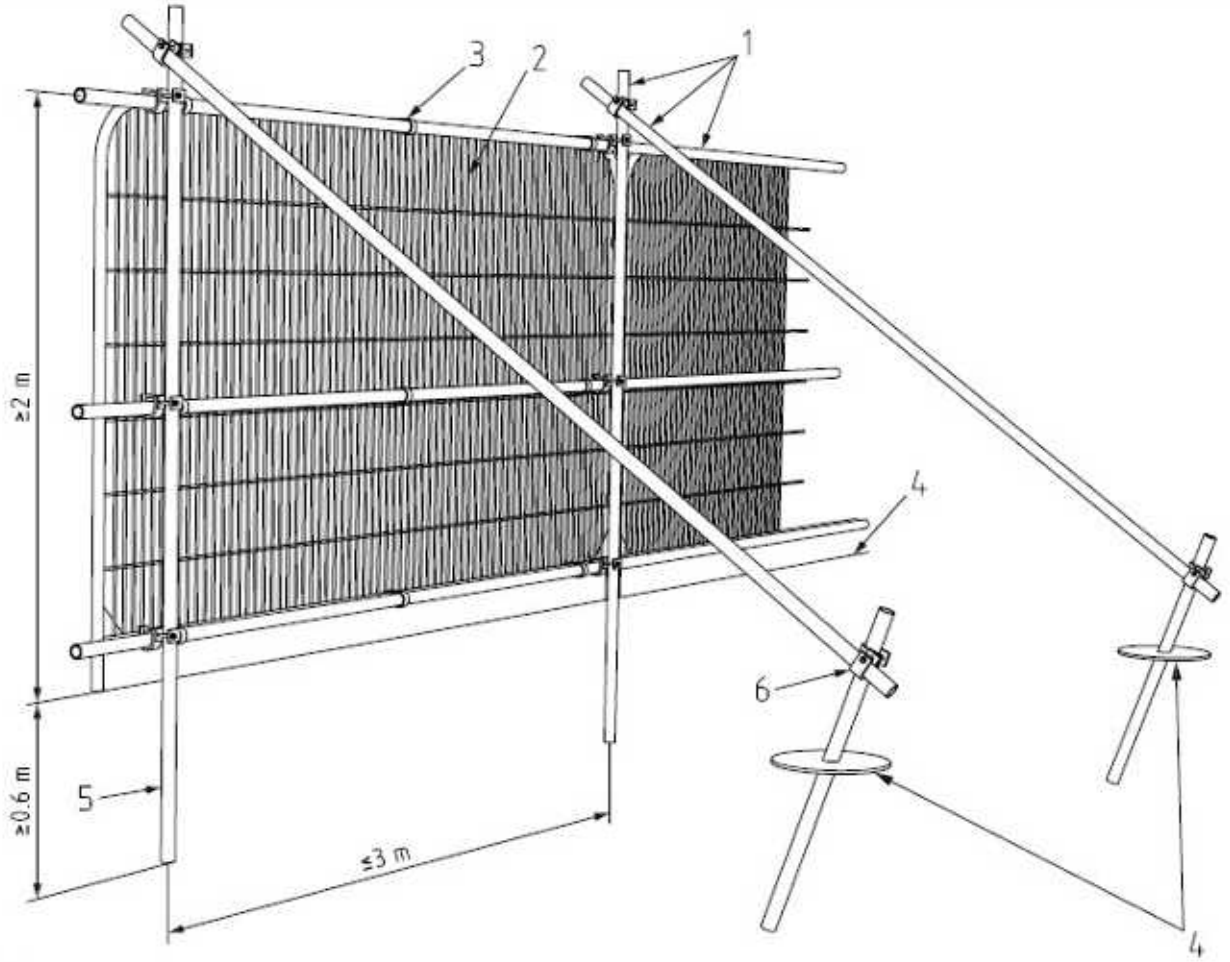

Key

1 Standard scaffold poles
2 Heavy gauge 2 m tall galvanized tube and welded mesh infill panels
3 Panels secured to uprights and cross-members with wire ties
4 Ground level
5 Uprights driven into the ground until secure (minimum depth 0.6 m)
6 Standard scaffold clamps

Appendix 4. Signs.





Appendix 5. Tree survey

The trees were assessed objectively using 'Visual Tree Assessment' (VTA) techniques from the ground. VTA is a methodology, employed by arboriculturists, to evaluate the structural integrity of a tree, relying on observation of a trees biomechanical and physiological features; this is the method generally adopted and is appropriate in this instance. The survey includes an individual tree number listed sequentially, tree Species in both its common and botanical name, its height, stem diameter measured at 1.5m from ground level, spread of the radius of the crown by cardinal points, height of the crown above ground level, age classification its general condition and any general conditions structural or biological defects noted during the survey. An estimate of the remaining safe life expectancy (SLE) and the category as defined in BS 5837:2012 Recommendations cascade chart for tree quality assessment.

The root protection area (RPA) will be calculated from the stem diameter and this will identify the area which will require special protection during the works.

Trees on the site have been divided into one of four categories (based on the cascade chart for tree quality assessment). These are classed as A, B, C or U (Section 4 of BS 5837) within the table in Appendix 1, Table 2. This gives an indication as to the tree's importance in relation to the site, the local landscape and, also, the value and quality of the existing trees on site. This assists informal decisions concerning which trees should be removed or retained should development occur. For a tree to qualify under any given category it should fall within the scope of that category's definition (see below).

Categories A, B and C cover trees that should be a material consideration in the development process, each with three further sub-categories (i, ii, iii) which are intended to reflect arboricultural, landscape and cultural (nature conservation) values. Category U trees may have no significant landscape value, but it is not presumed that there is any overriding need to remove these unless stated otherwise in the description and recommendations. They are for this reason not considered as being significant within the planning process. In assigning trees to the A, B or C categories, and the presence of any serious disease or tree–related hazard is taken into account. If the disease is considered fatal and/or irremediable, or likely to require sanitation for the protection of other trees it may be categorised as U with a recommendation for work or even removal, even if they are otherwise of considerable value.

Category (A): Trees whose retention is most desirable and are of high quality and value. These trees are considered to be in such a condition as to be able to make a lasting contribution (a minimum of 40 years) and may comprise:

(i) Trees which are particularly good examples of their species especially rare or unusual, or essential components of groups or of formal or semi-formal arboricultural features (e.g. the dominant and/or principal trees within an avenue);

(ii) Trees, or groups of trees which provide a definite screening or softening effect to the locality in relation to views into or out of the site, or those of particular visual importance (e.g. avenues or other arboricultural features assessed as groups);

(iii) Trees or groups of significant conservation, historical, commemorative or other value (e.g. Veteran or wood-pasture trees).

Category (B): Trees whose retention is considered desirable and are of moderate quality and value. These trees are considered to be in such a condition as to make a significant contribution (a minimum of 20 years) and may comprise:

(i) Trees that might be included in the high category but because of their numbers or slightly impaired condition (e.g. presence of remediable defects including unsympathetic past management and minor storm damage), are downgraded in favour of the best individuals;

(ii) Trees present in numbers such that they form distinct landscape features and attract a higher collective rating than they would as individuals. Individually these trees are not essential components of formal or semi-formal arboricultural features, or trees situated mainly internally to the site and have little visual impact beyond the site;

(iii) Trees with clearly identifiable conservation or other cultural benefits.

Category (C): Trees that could be retained and are considered to be of low quality and value. These trees are in an adequate condition to remain until new planting could be established (a minimum of ten years) or are young trees with a stem diameter below 150 mm and may comprise:

(i) Trees not qualifying in higher categories;

(ii) Trees present in groups or woodlands, but without this conferring on them significantly greater landscape value and or trees offering low or only temporary screening benefit;

(iii) Trees with very limited conservation or other cultural benefits.

Category (U): Trees that are considered to have no significant landscape value, but it is not presumed that there is any overriding need to remove these unless stated otherwise in the description and recommendations. They are for this reason not considered as being significant within the planning process. These trees will be in such a condition that any existing value would be lost within 10 years and which should in the current context be ignored or removed for reasons of sound arboricultural management. Trees within this category are:

(i) Trees that have a serious irremediable, structural defect, such that their early loss is expected due to collapse, including those that will become unviable after removal of other category U trees;

(ii) Trees that are dead or are showing signs of significant, immediate or irreversible overall decline;

(iii) Trees infected with pathogens of significance to the health and or/safety of other trees nearby, or very low quality trees suppressing adjacent trees of better quality.

All U Category (poor quality) trees should generally be removed for reasons of sound arboricultural practice or health & safety, irrespective of any development proposals, unless they offer particular conservation value to the site, in which case this will be highlighted in the survey schedule along with appropriate recommendations.

As regards the C category trees, it may not always be possible or even desirable to retain low quality trees within the context of a proposed development, unless in such a location that they do not represent a significant constraint on the design brief. Young trees, and those with a stem diameter of less than 150mm, will normally be placed in the C category, unless it is considered that they are of especially good form or are of a species that is particularly rare, in which case they may be upgraded.

All A & B Category trees (high & moderate quality) will under normal circumstances be retained on development sites, and should ideally influence and inform the conceptual design, site layout, and in some cases the specific construction methods to be used – The root protection area and/or crown spread of these trees will generally form a construction exclusion zone, although under certain circumstances it may be possible to build or operate within these areas providing that appropriate measures and specifications have been formally agreed between the local planning authority, the consulting arborist and the developer/client.

The Soil type was not assessed.

This report is valid for two years from the date of site inspection. The condition of trees can change following severe weather conditions, the effects of diseases and pests, and other abiotic factors.

Appendix 6. Legal Constraints

Where Local Planning Authorities can assess trees as beneficial to the wider community in terms of their amenity value, they may be protected by a Tree Preservation Order (TPO).

In certain areas classified as Conservation Areas, all trees with a stem diameter of 75mm (measured at 1.5m above ground) are protected by Conservation Area legislation. The LPA must be given notice of any work intended so they can visit the site and then either protect the tree(s) with a TPO or allow the works to go ahead. Their decision must be made within a six-week period. If no decision is made within the six-week period, the work may be carried out, providing it is done within a two-year period.

If trees protected by a TPO or within conservation areas are cut-down, topped, lopped, uprooted or wilfully damaged or destroyed, the owner of the tree(s) and the contractor responsible for the work can both be legally prosecuted. The current maximum fine is £20,000 per tree at the Magistrates Court or unlimited fine at the Crown Court.

Trees that are dead or dangerous are exempt from legislation. It is common good practice to notify the LPA of intention to carry out work to trees that fall into these categories, preferably with some notice (e.g. one working week).

A leaflet produced by the DTLR (Protected Trees), covers the issues raised by this legislation.

Any works prescriptions for protected trees can be dealt with by way of inclusion into a Planning Application for development purposes; this avoids the need to make a separate tree application.

A check with the Local Planning Authority has not been carried out.

Statutory wildlife obligations: The Wildlife and Countryside Act 1981 as amended by the Countryside and The Habitat Regulations 2012 and The Conservation of Habitats and Species Regulations 2017 provide statutory protection to birds, bats and other species that inhabit trees. All tree work operations are covered by these provisions and advice from an ecologist should be obtained before undertaking any works that might constitute an offence.

Appendix 7. Arboricultural considerations in relation to development.

Rooting structure

Rooting structure is a key issue when dealing with trees and development. To ensure the survival of trees the British Standard Institute has introduced the concept of a Root Protection Area (RPA). The RPA is an area surrounding a tree that contains sufficient rooting volume to ensure the tree's survival and is represented in square metres. (BS5837 2012 discusses the extent and for of a trees root system.)
The following diagram represents the typical rooting pattern of a tree. Note that 90% of the trees roots are usually located within the top 1m of soil and that roots may spread well beyond the canopy. Therefore, no works are allowed within the RPA. Even a small trench 0.5 metres deep to accommodate a cable or drain may lead to the loss of the tree. When work is proposed or is absolutely necessary within the RPAs of retained trees the proposals will only be considered if supported by an agreed robust and realistic Arboricultural Method Statement, following recommendations within BS 5837 2012.

Typical rooting structure of a tree

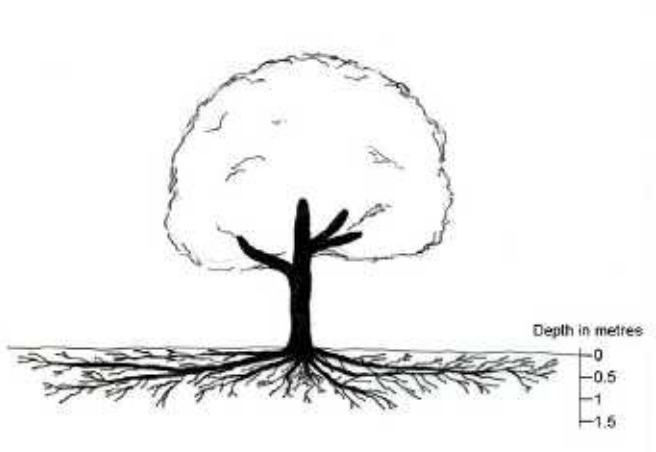

To successfully integrate trees into a development it will be necessary to allow enough space in the design to allow trees to mature and flourish and to agree protection measures during the entire construction phase. Trees should be considered at the earliest design stage to allow them to be successfully integrated into new development, a survey of trees on and adjacent to the site should be one of the first steps in the design process.

How can trees be damaged?

Compaction of the soil

When soil is compacted, the soil structure is damaged by removing the spaces between soil particles preventing the exchange of gases and uptake of nutrients by trees. The storage of materials, including bricks, soil, gravel and cement, and the movement of vehicles can cause compaction. One vehicle movement can cause sufficient compaction to damage a tree. Compacted ground may alter soil drainage, resulting in the ground becoming waterlogged. The storage of materials and the movement of vehicles within RPAs will only be permitted when it is shown to be absolutely necessary and supported by an agreed robust and realistic Arboricultural Method Statement.

Excavations

Excavations within the RPA are likely to cause root severance. This may lead to loss of vigor, reduced uptake of water and nutrients, allow access for decay organisms and may compromise the tree's stability. Under exceptional circumstances, where excavation may be justified, hand digging will be required and the presence of an arboricultural consultant to supervise the works will be required on site.

Ground level changes

Both reduction and raising of soil levels can be detrimental even if this is only by a few centimeters. Reducing ground levels may sever roots and can increase the drainage of a site thereby reducing water availability. Raising ground levels can cause compaction and suffocate roots. There will be a presumption against the changing of ground levels within RPAs. Changing of ground levels within RPAs will only be permitted when it is shown to be absolutely necessary and supported by an agreed robust and realistic Arboricultural Method Statement.

Impact damage

This can be caused by machinery and includes torn branches, and damage to bark and trunk. Damaged areas of trees can allow the entry of decay organisms and reduced vigour. There will be a presumption against the movement of machinery and equipment within RPAs. The movement of machinery and equipment will only be permitted when it is shown to be absolutely necessary and supported by an agreed robust and realistic Arboricultural Method Statement.

Soil contamination

This can be caused by the spillage of oil, fuel and chemicals, mixing cement or other materials. To prevent leaching through the soil where significant tree roots can be found, all chemicals should be kept in a safe storage area downhill from trees at least 10m from the RPA. There will be a presumption against the storage of chemicals within 10m of the RPAs of retained trees and storage will only be permitted when it is shown to be absolutely necessary and supported by an agreed robust and realistic Arboricultural Method Statement.

Fires

Conducted and radiated heat as well as flames will damage trees resulting in the loss and damage to both major and fibrous roots, and damage to the trees vascular system under the bark even if the bark does not appear burnt. Keep fires a minimum of 10m from the outer crown spread of any retained trees or vegetation. If this clearance is not achievable, all waste must be disposed of off-site.

Appendix 8. Biosecurity advice

Please see the Forestry Commission's latest guidance in relation to biosecurity.

Biosecurity measures are a series of precautionary steps designed to reduce the risk of transmission of harmful organisms and must address 'movement pathways' for such organisms. In the context of the following guidance, good biosecurity practice refers to ways of working that minimise the risk of contamination and the spread of pests and invasive plants. Unless stated otherwise, the term "pest" should be taken to include all invertebrate, bacterial or fungal organisms that are harmful to trees. The term does not refer to other threats to trees such as deer or grey squirrels. https://www.forestresearch.gov.uk/documents/5498/FC_Biosecurity_Guidance_Y6HQJHZ.pdf