# GATES AND FENCING

## POST AND RAIL FENCE - Timber

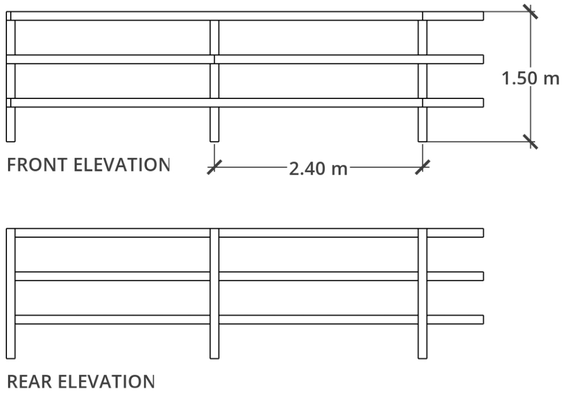


## CLOSED BOARDED FENCE - Concrete posts & timber panels

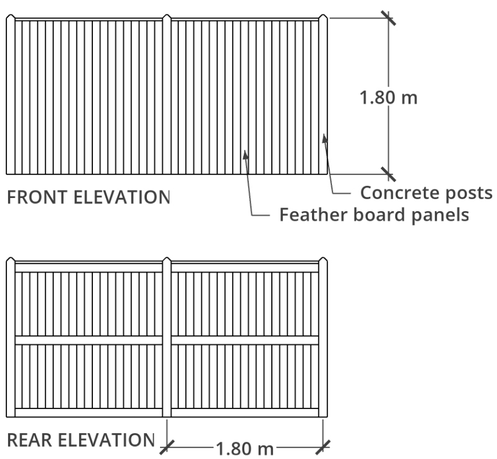


## CLOSED BOARDED FENCE - Timber posts & timber panels

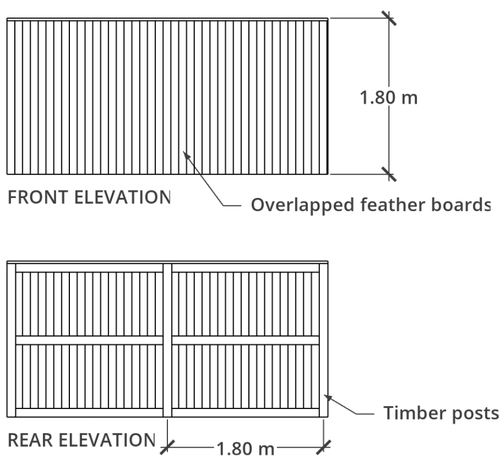


## ENTRANCE GATES PITCH 1&2 - Metal

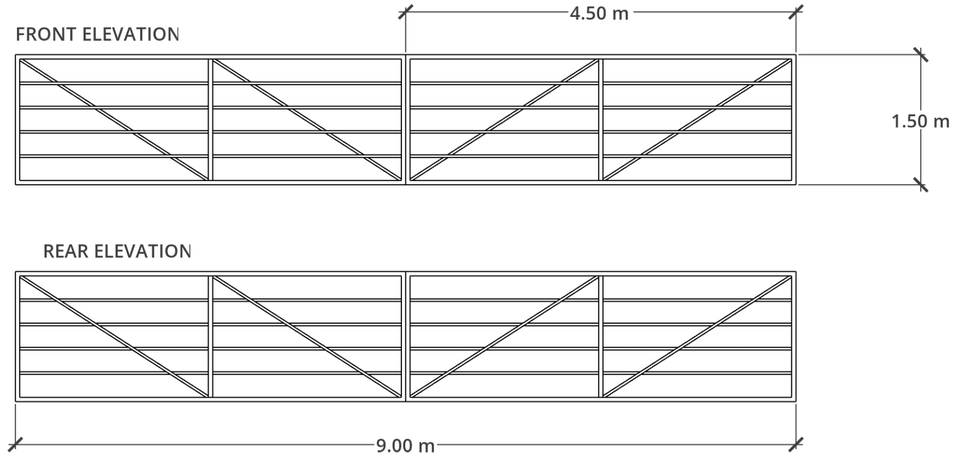


## SOUTH GATES/ SHARED GATE PITCH 1&2 - Timber

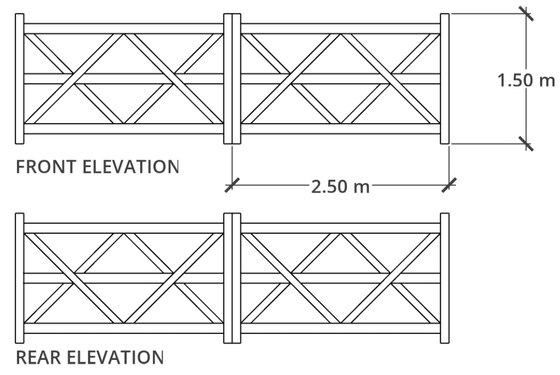


## SOUTHEAST GATE PITCH 2 - Timber

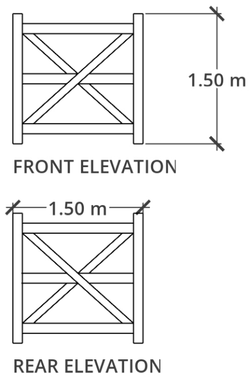


0 1 2 3 4 5 6 metres

EW08 - The Meadow, Middle Drove, Ramsey Heights, Huntingdonshire, PE26 2RG

GATES AND FENCING

Scale 1:50 at A2

Drawn by G Richmond

MICHAEL HARGREAVES PLANNING
5 HIGH STREET SWAFFHAM PRIOR
CAMBRIDGE CB25 0LD