Tree Protection Plan
and
Arboricultural Method Statement

Plus Response to PLA
Arboricultural Officer

Site:
Newlands Holywell PE27 4TQ

1. Terms of Reference

1.1. Initial instructions were received 28th July 2025, asked to respond to “Arboricultural Consultation Response” from Huntingdon District Council (HDC) Local Planning Authority (LPA) reference 25/00816/HHFUL. see Appendix 1.

1.2. The Initial Application 25/00816/HHFUL included drawing “drawing _03A”. Showing the location and number key of all trees, read in conjunction with the document Tree Survey showing the spices, size and hight of the trees within the curtilage. See Appendix 2 and Appendix 3. The location, Root Protection Area, RPA and Construction Exclusion Zone, CEZ, can be seen in Appendix. It is noted that trees outside of the curtilage are not labelled on this document, for enlarged and labelled plan see 3.1.7 below.

1.3. We have undertaken a tree survey to produce a Tree Protection Plan (TPP) and Arboricultural Method Statement (AMS) in accordance with British Standard BS5837: to satisfy the tree protection requirements of LPA Policy LP31, trees within the boundary of the property. Additionally, we have reviewed trees immediately outside the curtilage of the property, as referred to in 2.4 below.

1.4. Using the detailed topographical plan, trees have been plotted in relation to existing site features.

2. HDC LPA Arboricultural Consultation Response Questions

2.1. “As shown on the aerial imagery, there are a number of large mature trees growing on site and located within influencing distance of the development. As such, it is necessary to demonstrate that no significant harm will be caused by the proposals.”

2.2. “A Tree Protection Plan/Method Statement will be required describing accurately the location and type of fencing to be used for preventing access. Any damage to the trees on (and off) site that are to be retained will need to be protected.”

2.3. *“It does not appear that the extension will be within the RPA's of these trees, but it is not possible to tell without measurements and mapping confirming this.”*

2.4. *“Mixing of chemicals, storage of materials and other damaging practises will be avoided by following the suggested measures.”*

3. Response to Questions raised.

3.1. *“ As shown on the aerial imagery, there are a number of large mature trees growing on site, and located within influencing distance of the development. As such, it is necessary to demonstrate that no significant harm will be caused by the proposals.”*

3.1.1. In answer to Question 2.1, the below annotation helps to Identify the four tree clusters. Two within the curtilage and two outside the curtilage.

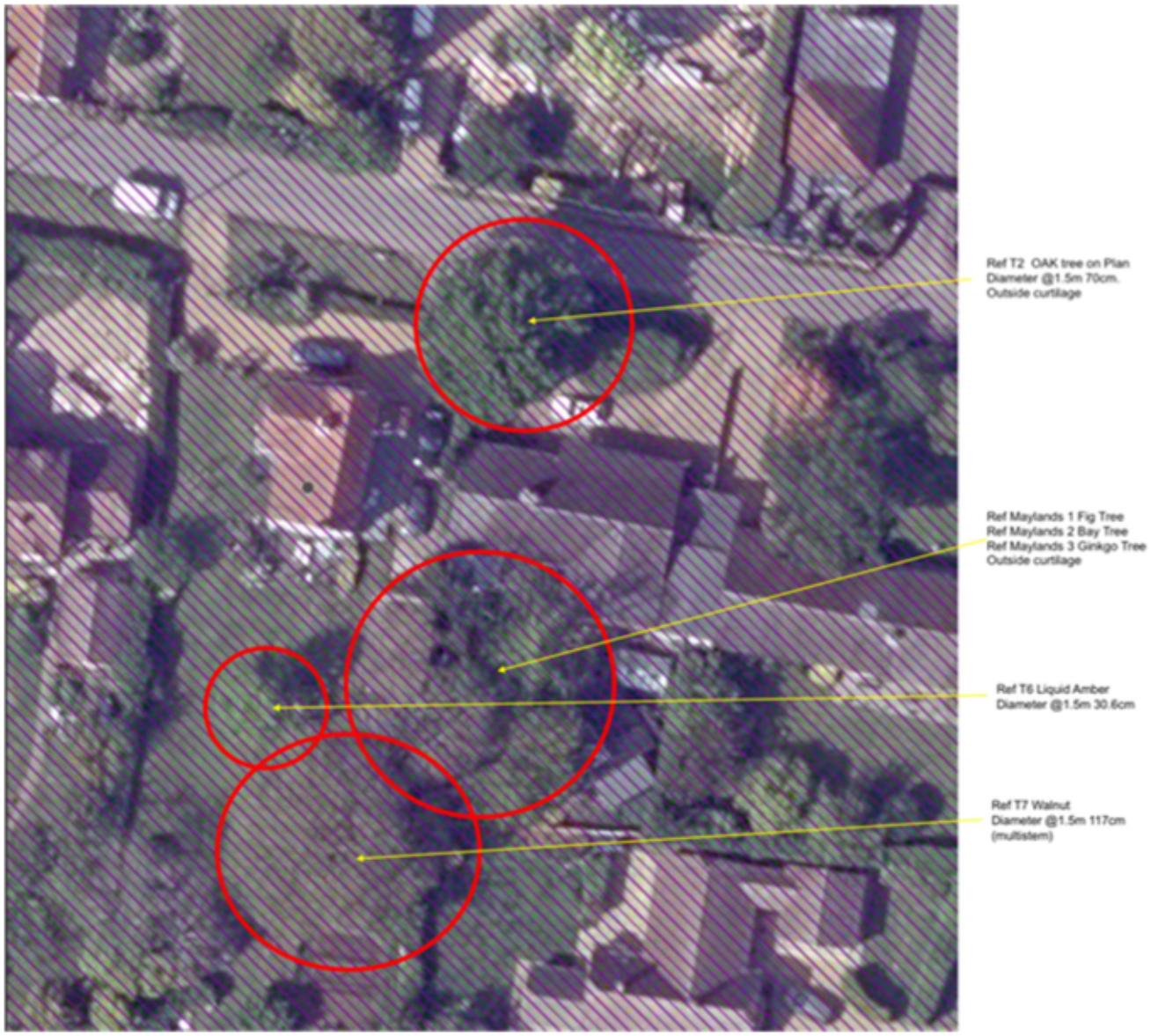

3.1.2. T2 Oak - This tree sits outside the curtilage of the property by 2meters. There are branches over hanging the property entrance. During material delivery and construction activities, TPP measures will be followed and signage posted.

3.1.3. There are no excavation activities in the RPA this tree and the access was established in 1932 with construction of the property.

3.1.4. Maylands Trees 1,2,3. These trees sit outside the curtilage of the property by 5m, 0.7m and *8m*. See Photographs in Appendix 7. There are branches of the Bay over hanging a concrete hard standing on the property, which protect and prevents damage to the RPA. This area is marked as a CEZ on the drawing 22505_03 A, see excerpt below para 3.1.7.

3.1.5. T6 Liquid Amber - This tree sits 7.8meters from the proposed extension. It has a RPA of 3.6meters. The RPA and Tree will be fully protected in CEZ marked on the drawing 22505_03 A, see excerpt below para 3.1.7.

3.1.6. T7 Walnut – This multi stem tree is 17.5 meters from the proposed extension. It has a RPA of 10.1meters. The RPA sits fully inside the CEZ marked on the drawing 22505_03 A, see excerpt below para 3.1.6. T7 also has undergrowth of “Bolus Plum” trees <10cm diameter

3.1.7. Excerpt of 22505_30 A with added detail of trees outside the curtilage

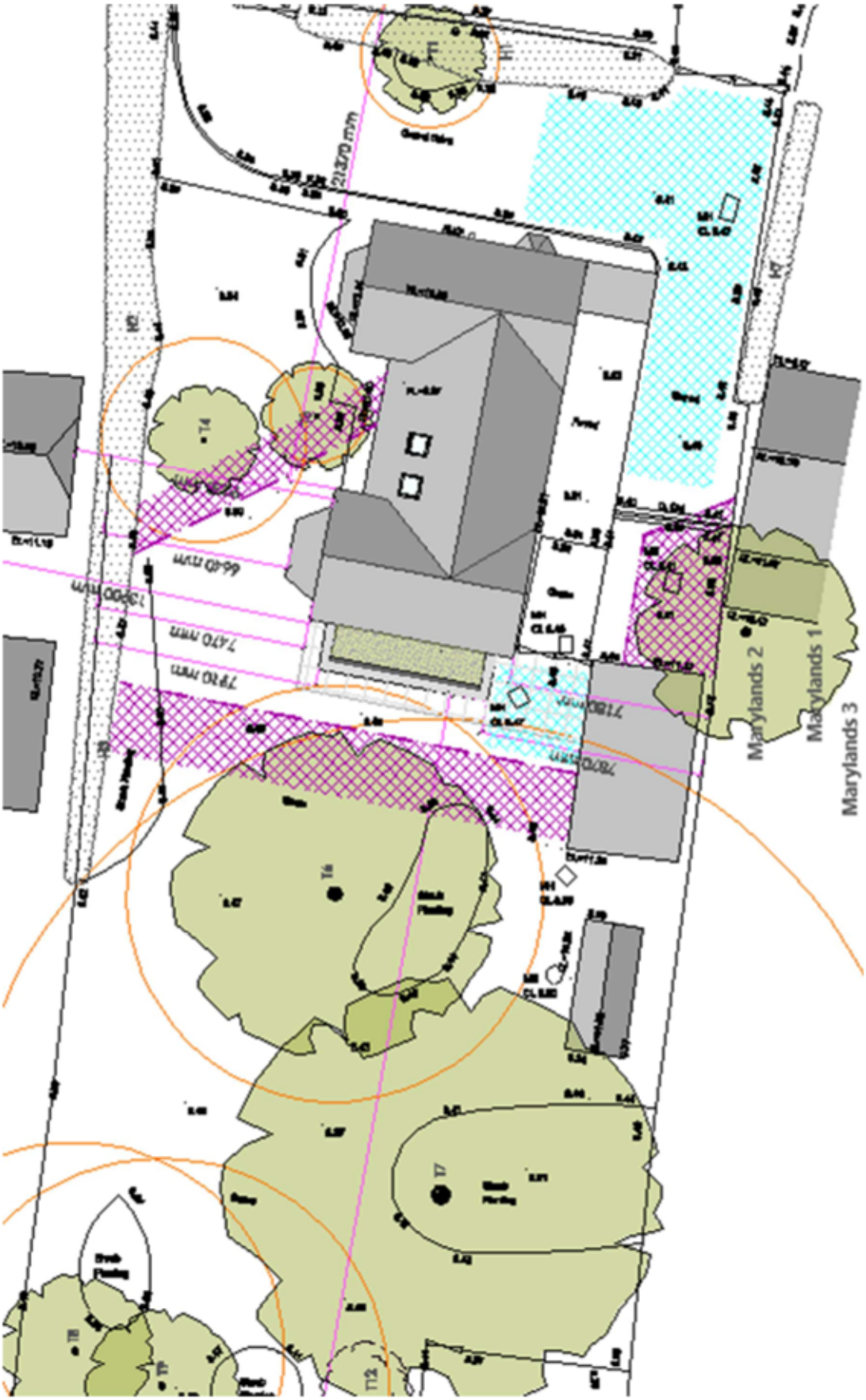

3.2. *"A Tree Protection Plan/Method Statement will be required describing accurately the location and type of fencing to be used for preventing access. Any damage to the trees on (and off) site that are to be retained will need to be protected.*

3.2.1. In Answer to question 2.2 Refer to sections 7 onward in this document. Clear direction of signage, fencing, pedestrian and vehicular access is documented in TPP and Method Statement, to protect the trees on site and adjacent to the site.

3.3. "*It does not appear that the extension will be within the RPA's of these trees, but it is not possible to tell without measurements and mapping confirming this.*

3.3.1. In answer to question 2.3 Reference to Document 22505_03 A shows RPA for each tree. It is confirmed that RPA do not extend to the construction area.

3.4. "Mixing of chemicals, storage of materials and other damaging practises will be avoided by following the suggested measures.

3.4.1. In Answer to question 2.4 No storage or mixing of chemicals will take place in the CEZ, and Best Practice will be followed in the use and disposal of all chemicals and contaminated water.

4. Planning Policy LP 31

4.1. The grant of planning permission relating to this development is subject to the following planning condition specifically relating to tree protection measures. This relates directly to the approval of and compliance with the tree protection measures detailed within this document, Arboricultural Method Statement and Tree Protection Plan.

4.2. ***LP 31*** ***Trees, Woodland, Hedges and Hedgerows*** *A proposal will be required to demonstrate that the potential for adverse impacts on trees, woodland, hedges and hedgerows has been investigated. Where investigations show that such adverse impacts are possible a statement will be required that:*

4.2.1. *assesses all trees, woodland, hedges and hedgerows that would be affected by the proposal, describing and assessing their value;*

4.2.2. sets out how the details of the proposal have been decided upon in terms of their impact on the value of trees, woodland, hedges and hedgerows and how adverse impacts will be avoided as far as possible, or if unavoidable how they will be minimised as far as possible.

4.3. A proposal will only be supported where it seeks to conserve and enhance any existing tree, woodland, hedge or hedgerow of value that would be affected by the proposed development. In such cases the proposal will be expected to make reference to and follow the guidance contained in the Council's A Tree Strategy for Huntingdonshire (2015) or successor documents

4.4. Loss, threat or damage to any tree, woodland, hedge or hedgerow of visual, heritage or nature conservation value will only be acceptable where:

4.4.1. It is addressed firstly by seeking to avoid the impact, then to minimise the impact and finally where appropriate to include mitigation measures; or

4.4.2. there are sound Arboricultural reasons to support the proposal.

4.4.3. Where impacts remain the need for, and benefits of, the development in that location must clearly outweigh the loss, threat or damage.

4.4.4. Where loss, threat or damage cannot be fully addressed through minimisation and/ or mitigation measures the proposal may be supported if alternative measures such as reinstatement of features, additional landscaping, habitat creation or tree planting will compensate for the harm and can be implemented and established before development starts.

4.4.5. The scheme shall be implemented in accordance with the TPP approved details, prior to demolition or construction on site.

4.5. To safeguard the health and safety of trees during building operations and the visual amenities of the area generally and to comply with LPA Policy

4.5.1. Any breaches of these or other conditions may result in the LPA carrying out an investigation of that breach. The client / developer will be advised to adhere to the requirements of the planning condition(s) and if the breach continues to take place the LPA can use various planning enforcement tools such as a Temporary Stop Notice, Enforcement / Stop Notice or a Breach of Condition Notice.

4.5.2. Notifying the Local Planning Authority - It is the responsibility of the client or their appointed Site Agent / Manager to ensure that appropriate notice as required by the LPA is given prior to the commencement of works.

4.5.3. Pre-Commencement Site Meeting - A pre-commencement site meeting is recommended and should be arranged by the client or their appointed Site Agent / Manager including the main contractor and arboriculturist (with the LPA Tree Officer invited to attend) to ensure the measures of the TPP are implemented as per this report.

5. Scope of Report and Limitations

5.1. The tree data gathered is for the purposes of a development site survey in accordance with BS5837:2012 and is **not** a detailed tree safety inspection. As general guidance it is recommended that regular tree safety inspections are carried out by a competent person to ensure that the owner / controller of the land fulfils their duty of care to persons who may reasonably be affected.

5.2. A preliminary visual assessment of each tree was carried out from ground level noting external faults and features only. All measurements are as measured January 2025, tree locations on the attached plans are precise. Tree height was estimated using shadow comparison method.

5.3. This preliminary assessment did not include a detailed examination of tree root systems, aerial access, or the use of internal decay detection equipment. A tree with internal faults will often display associated external evidence of such faults; these would be noted in a visual tree inspection. However, such signs are not always apparent at all times of the year, for example fungal fruiting bodies or leaf size and condition. The survey findings and recommendations have been drawn from the evidence present on the day of inspection.

5.4. All trees identified on property have been surveyed as per instructions received i.e. those within or immediately adjacent to Newlands Holywell, which could be affected either directly (proximal to the area of construction) or indirectly (e.g. during the construction phase). It is recommended that the owners of any trees adjacent to the site have them inspected by a qualified and competent arboriculturist.

5.5. This report expressly excludes any liability for any direct or indirect structural damage that the trees may cause to property including any structural movement, subsidence and heave. Where necessary, appropriate specialists e.g. structural engineer, building surveyor or drainage expert should be consulted for specific advice including foundation design and anti-heave precautions. No reliance shall be placed on any comment(s) made in respect of the structural integrity of any main structure or drainage system located on the premises to which this survey and report relates.

5.6. The survey expressly excludes an assessment of the presence or absence of any invasive species (including Giant Hogweed, Japanese Knotweed and Himalayan Balsam). Specific advice on this matter should be obtained from a specialist in invasive weed surveying and treatment including the production of any management plans.

5.7. The Local Planning Authority confirmed the site is in a Conservation Area, and there are no trees subject to a Tree Preservation Order (TPO) on the site and that any relevant prior planning conditions have been appropriately discharged.

5.8. Full consideration must be given to current legislation by anyone proposing to carry out works to trees, particularly with regards to the presence of European Protected Species (including bats). Arboricultural ('tree surgery') contractors should be accredited and carry adequate insurance. All works should be carried out to the current edition of British Standard BS3998 'Recommendations for Tree Work'

5.9. This report should be considered valid for a period of **12 months** from date of original issue assuming that any recommendations are carried out. Additional inspection is recommended following exposure to extreme weather, significant wounding or damage (e.g. incursion into the rooting zone, impacts, etc.) or any other event giving cause for concern.

5.10. The information contained within this document is provided without prejudice and is based upon the author's knowledge, experience, qualification, and cannot be held responsible for the consequences of a difference of opinion held by third parties, for example the Local Planning Authority or Planning Inspectorate.

5.11. Third Party Disclaimer: Any disclosure of this report to a third party is subject to this disclaimer. The report was prepared by Tim Gooders, for the use by the Local Planning Authority. This report does not in any way constitute advice to any third party who is able to access it by any means.

6. Arboricultural Method Statement

6.1. An Arboricultural Method Statement (AMS) will be required where any construction operations, including access, are proposed within or adjacent to the Root Protection Area RPA (or crown spread where this is greater) of any retained trees. This applies to trees within the scope of this proposed development.

6.2. The RPA was calculated to BS5837:2012 using online tool https://www.allsilva.co.uk/rpacalculator

6.3. On review of the works, RPA and the development area, it was deemed that no trees will be impacted by any works and that only a Tree Protection Plan is needed in line with the LPA PAA. This will specify appropriate tree and ground protection measures in accordance with BS5837:2012.

7. Pre-Construction Schedule of Works to Trees

7.1. Trees to be Removed – No trees to be removed.

7.2. The trees within the boundary of the property are to be Protected by fence / barrier. Trees outside of property to be protected by Fencing

7.3. Trees outside of the property with a RPA within the property, to be fenced and marked to provide a CEZ.

7.4. Trees to be Retained – All trees to be retained.

8. Conditions Regarding Tree Work

8.1. Full consideration must be given to all relevant legislation including the Health and Safety at Work Act 1974, the Management of Health and Safety at Work Regulations 1999, the Wildlife and Countryside Act 1981 (as amended), The Countryside and Rights of Way Act 2000 and the Conservation of Habitats and Species Regulations 2017 regarding European Protected Species such as bats. Works should be timed, where possible, to avoid the bird nesting season (March to September)

8.2. Contractors to comply with the Work at Height Regulations 2005 particularly when making an assessment of a tree's condition before undertaking any remedial works.

9. Tree Protection Plan Protective Fencing Specification

9.1. Protective fencing will be fit for purpose, complying with Figures 2-3 in BS5837:2012 unless otherwise specified and agreed in writing by the LPA.

9.2. Preferred Options:

9.2.1. Harris Fencing form of protection, mounted on block tray, to be securely installed without causing any root damage

9.2.2. In low-risk environments, west of dewelling, using orange builder's mesh supported by road pins.

9.2.3. To mark pedestriam access route Road Pin posts and Warning tape will suffice.

9.3. Protective fencing will:

9.3.1. Be erected prior to any demolition or construction taking place at distances specified within the Tree Protection Plan 22505_30 A

9.4. Have appropriate all-weather warning signs clearly affixed 'CAUTION - PROTECTED TREE' (See Appendix 1 for suggested examples)

9.4.1. Remain in place until completion of the construction phase. Removal only to take place following the approval of the Tree Officer.

9.5. Once erected, the area within the barriers – the **Construction Exclusion Zone** (pink hatched area marked 'CEZ' on the Tree Protection Plan) – must be regarded as sacrosanct and not removed or altered without the prior recommendation of an arboriculturist and approval of the LPA / Local Authority Tree Officer.

9.6. Care must be taken to avoid underground utilities or buried obstacles when installing any support poles or pegs (the supports being installed on the 'protected CEZ side of the fencing).

9.7. No site huts or temporary storage containers are to be sited in CEZ or use any of its components for support or construction

9.8. No excavation within the RPA to install the huts and no trenching to install temporary services e.g. drainage to the site facilities

9.9. Observe all precautions set out in this document regarding discharge of materials, diesel, concrete, etc. and emergency procedures in the event of spillages

Figure 3 **Examples of above-ground stabilizing systems**

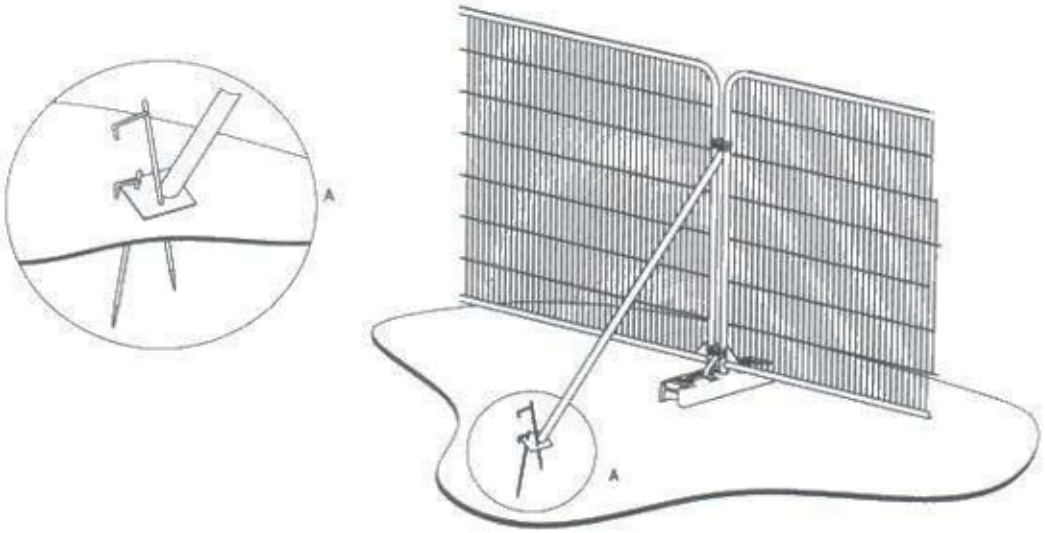

a) Stabilizer strut with base plate secured with ground pins

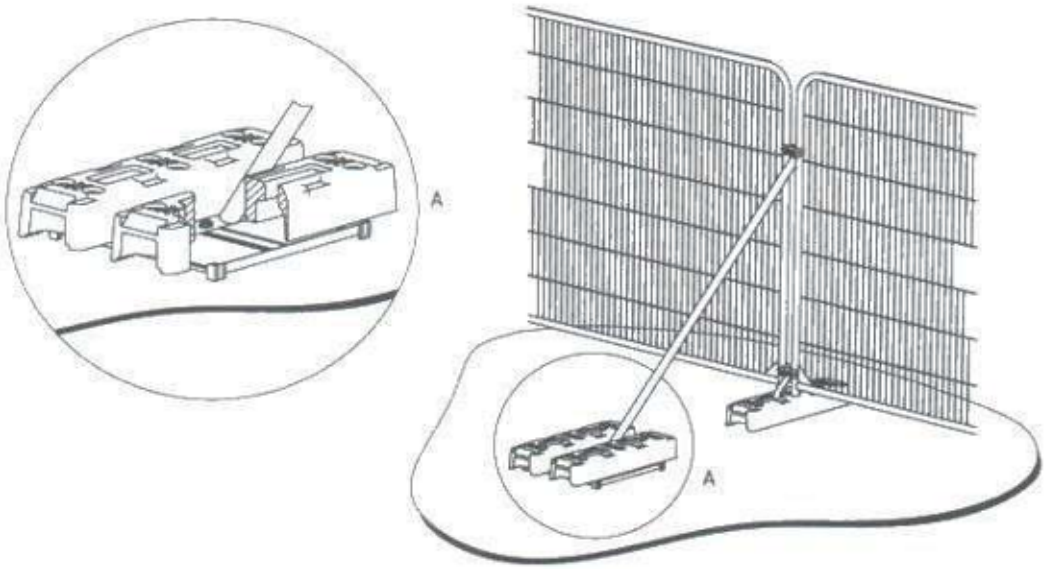

b) Stabilizer strut mounted on block tray

10. Ground Protection and Temporary Access

10.1. Due to the location of the CEZ's it is envisioned that there will be limited need to gain construction access.

10.2. Where temporary ground protection is required within the Root Protection Area or CEZ of a retained tree(s) as shown on the Tree Protection Plan, then this should be designed to cope with the expected load and be capable of preventing soil compaction. Detailed guidance is provided in BS5837:2012 section 6.2.3.3 including for:

10.3. Pedestrian movement (including scaffolding) - a single-thickness scaffold board on top of a compressible layer e.g. 100mm depth of woodchip laid on a geotextile fabric

10.4. Pedestrian-operated plant up to 2t – proprietary ground protection boards on top of a compressible layer e.g. 150mm depth of woodchip laid on a geotextile fabric

10.5. Where scaffolding requires additional space to be safely installed or for a wider working width, the tree protection fencing may be moved back as required only if this is accompanied by a corresponding increase in appropriate ground protection. If the supporting feet need to be placed directly onto the ground for reasons of stability, their combined area should not result in a significant incursion into any RPA.

11. Development Operations

11.1. The nature of the development and construction space should result in a low intensity build environment as overseen by the Client's appointed Site Agent / Manager. Details (subject to confirmation) include:

Site Access	Site access from Back Lane via front of property, two entrances are usable
Build Sequence / Arboricultural Supervision & Monitoring	Installation of tree protection fencing / temporary ground protection Excavation # / installation of new foundations / connection to drain & service utility runs Construction of extension to dwelling Hard landscaping operations Soft landscaping operations **# Indicates Arboricultural Involvement / Supervision / Monitoring Recommended**
Service Installation including drainage	Use of existing service routing where possible with the routing of services outside of amended RPAs of any retained trees. (NJUG Vol Guidelines to be followed for any excavation / installation near trees)
Contractors Car Parking	Preferred off site parking, however on site parking, outside of CEZ in accordance with TPP
Deliveries / Storage	No materials to be stored / no concrete mixed / re-fuelling within CEZ's. Appropriate precautions in place e.g. fully bunded trays / impermeable membranes to prevent contaminants reaching any RPA
Site Huts / Welfare Facilities	May be located OUTSIDE RPA AND CEZ

11.2. Demolition - Partial demolition of existing dwelling operations are required. All plant should either be located outside of any RPA or operate on appropriate ground protection (see section 10, above) and any movements are supervised to avoid causing damage to retained trees.

11.3. Adequate water supplies should be in place so that if there is a significant build-up of dust on foliage then the trees can be hosed down.

11.4. Ground Level Changes - No ground level changes are anticipated as part of this development within the RPA or CEZ.

11.5. Removal of Existing Hard Surfaces - There are no hard surfaces to be removed within the RPA or CEZ.

11.6. Foundation Excavation / Installation The precise foundation design is yet to be determined by the architect / structural engineer and will be influenced by and the results of trial excavations, detailed geotechnical assessment and reference to NHBC Chapter 4.2, 2020.

11.7. If roots are exposed to be immediately wrapped or covered to avoid desiccation. Backfilling to take place as soon as possible. Prior to backfilling retained roots to be surrounded with topsoil, uncompacted sharp sand or other inert loose granular material before the soil is replaced. Pruning back of roots <25mm diameter making a clean cut with a suitable sharp tool. Clumps of roots and roots >25mm diameter only to be severed after consultation with an arboriculturist.

11.8. The soil and roots of retained trees adjacent to the foundations should be protected from the effects of wet concrete leachate through the use of impermeable liners or sheathing. **A copy of the finalised foundation design should be attached to the AMS when available and the project arboriculturist consulted on the need for any additional precautions.**





Root severance, tree de-stabilised. Significant roots retained

11.9. New Drainage - It is anticipated that connections will be made to the existing drainage runs and storm water storage. Connections will be outside of CEZ. Should there be need to be cited within these areas, then they must be subject to LPA approval and be accompanied by a separate method statement.

11.10. Hard Landscaping – No hard landscaping is planned within the CEZ.

11.10.1. Any new post holes or hard landscape foundations within any retained tree RPA should be carefully excavated using hand tools and should be positioned to avoid any damage to roots.

11.10.2. Any roots encountered <25mm in diameter should be cleanly severed and treated in accordance with BS5837:2012 section 7.2. Roots >25mm should only be severed following Arboricultural advice.

11.10.3. All in-situ poured concrete (e.g. foundations, new retaining walls / steps) near any retained trees must be separated from the existing soil by heavy duty impermeable membrane to prevent the potentially damaging effects on the rooting area.

11.10.4. Post holes should be lined with heavy duty impermeable membrane prior to the pouring of any concrete.

12. Soft Landscaping (including new tree and shrub planting – TBC

12.1. There are no soft landscaping works planned within this development. Repair and reinstatement of lawn grass is expected post construction.

12.2. Any Landscaping operations should be carried out in accordance with BS4428:1989

12.3. If landscaping is needed, Site Preparation should include *Protective fencing and use of Construction Exclusion Zone (see TPP) to protect potential new planting areas from compaction, contamination, etc.*

12.4. All ground preparation and planting operations adjacent to existing retained trees, shrubs and hedges to be undertaken using hand and light weight powered tools only.

12.5. Any changes in soil level +/- 300mm to be made using existing site material whenever possible, ensuring any imported soil meeting BS3882:2007 'Multipurpose' classification standards

12.6. Shrub planting areas are to be graded to be approximately 50mm below any adjacent surfaces prior to planting and mulching. Remaining landscape areas to be graded flush with existing/finished levels

12.7. Landscaping operations should be carried out in accordance with the following British Standards:

12.7.1. BS4428:1989 'Code of practice for general landscape operations (excluding hard surfaces)'

12.7.2. BS8545:2014 'Trees: from nursery to independence in the landscape – Recommendations'

12.7.3. BS5837:2012, 'Trees in relation to design–Recommendations'

12.7.4. BS3996 'Nursery Stock' (all parts)

12.7.5. BS7370-4 'Recommendations maintenance of soft landscape (other than trees)

13. Tree Planting

13.1. There are no plans to plant any trees in the construction zone.

14. Prohibited Activities / General Precautions

14.1.1. No storage of materials (including excavated material) or mixing of concrete / mortar within any RPA unless appropriate precautions are in place.

14.1.2. Any materials whose discharge may cause damage to a tree (concrete mixings, diesel, vehicle washings, etc.) should be handled well away from the outer edge of its RPA.

14.1.3. Consideration must be given to any slopes that may affect any run-off towards trees or future planning.

14.2. NO Fires on site, due to proximity of combustible materials and thatched properties adjacent to the site.

14.3. Banksman to oversee movements of high-sided vehicles, grab lorries, unloading, etc. in proximity to tree T1 in neighbouring property Back LaneHolywell

15. Responsibilities

15.1. It is the responsibility of the Client to ensure that all planning conditions relating to trees have been adequately discharged before any works to trees on site are undertaken. Unless

otherwise agreed in writing, it will be the responsibility of the client or their appointed Site Agent / Manager to ensure that the content of this Arboricultural Method Statement is adhered to.

15.1.1. The Client or their appointed Site Agent / Manager to arrange the pre-commencement site meeting

15.1.2. The main contractor and any sub-contractors are to be briefed on the relevant sections of this prior to commencing any works particularly with regards to the Prohibited Activities. Copies of general information regarding the prevention of damage to trees are included in Appendix 6 to assist with the site induction.

15.1.3. The Client or their appointed Site Agent / Manager are responsible for contacting the LPA / arboriculturist at any time issues relating to the trees on site are raised or when specialist Arboricultural advice is needed.

16. Supervision & Emergency Procedures

16.1. Day-to-day supervision will be the responsibility of the Client or their appointed Site Agent / Manager.

16.2. Supervision and monitoring by an arboriculturist at key stages of the development (as indicated at section's above) to be coordinated by the Client or their appointed Site Agent / Manager. An example of the Site Supervision / Site Visit Record template is included at Appendix 5

16.3. Water to be readily available on site and to be used to flush spilt materials through the soil to minimise tree root contamination. Provision of a fire bucket is suggested by the CEZ

16.4. Spill kits to always be available on site.

16.5. An arboriculturist to be contacted for advice immediately following any unauthorised incursion / spillages within the RPA

16.6. A copy of the Arboricultural Method Statement to always be available on site.

Appendix 1 - Arboricultural Consultation Response HDC.

Arboricultural Consultation Response	
Application No: 25/00816/HHFUL	**Location:** Newlands, Back Lane, Holywell
Case Officer: JF	**Proposals:** Erection of two storey and single storey extensions to rear

Observations:

An application has been submitted for the erection of a two storey extension to the rear of the above address. The proposal is located within the Conservation Area, but there are no TPO's currently in place on the property.

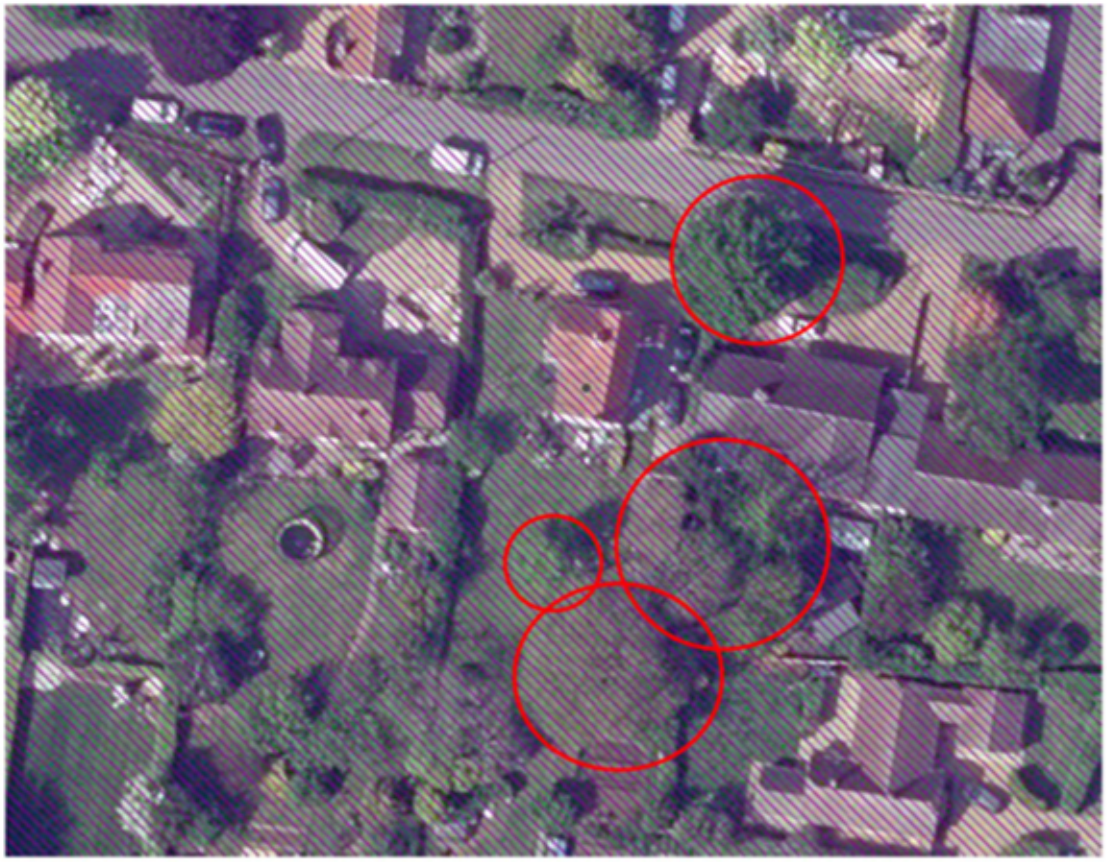

As shown above on the aerial imagery, there are a number of large mature trees growing on site, and located within influencing distance of the development. As such, it is necessary to demonstrate that no significant harm will be caused by the proposals. I have circled the trees of concern.



A Tree Protection Plan/Method Statement will be required describing accurately the location and type of fencing to be used for preventing access. Any damage to the trees on (and off) site that are to be retained will need to be protected.

It does not appear that the extension will be within the RPA's of these trees, but it is not possible to tell without measurements and mapping confirming this. The large tree in the rear garden (shown below) is of concern, as are the neighbours' trees, and the Oak at the front of the property.

The tree schedule is not a BS5837:2012 Survey, it is a list of trees with no locations or way of identifying which trees they are.







An up to date Arboriculutural Suvery and Tree Protection Plan/Method Statement must be provided, and should clearly demonstrate that damage during the construction damage can be avoided.

The type of fencing suggested must appropriate, and suitable for preventing access and damage to the RPA. Any works within an RPA, would need to be avoided or mitgagted.

Mixing of chemicals, storage of materials and other damaging practises will be avoided by following the suggested measures. **Comments** A Tree Protection Plan and Method Statements will be necessary to consider the application fully. However, assuming that all of the proposed works are outside of the RPA's, and a plan showing the location of fencing that prevents any access is submitted and acceptable, I would not have any objections.	
Recommendation: Refuse Application due to lack of information on which to make a decision. Tree Survey, TPP and Method Statements required.	
Signed: NS	**Date: 24/07/2025**

Appendix 2 – Site Plan drawing 22505_03 A

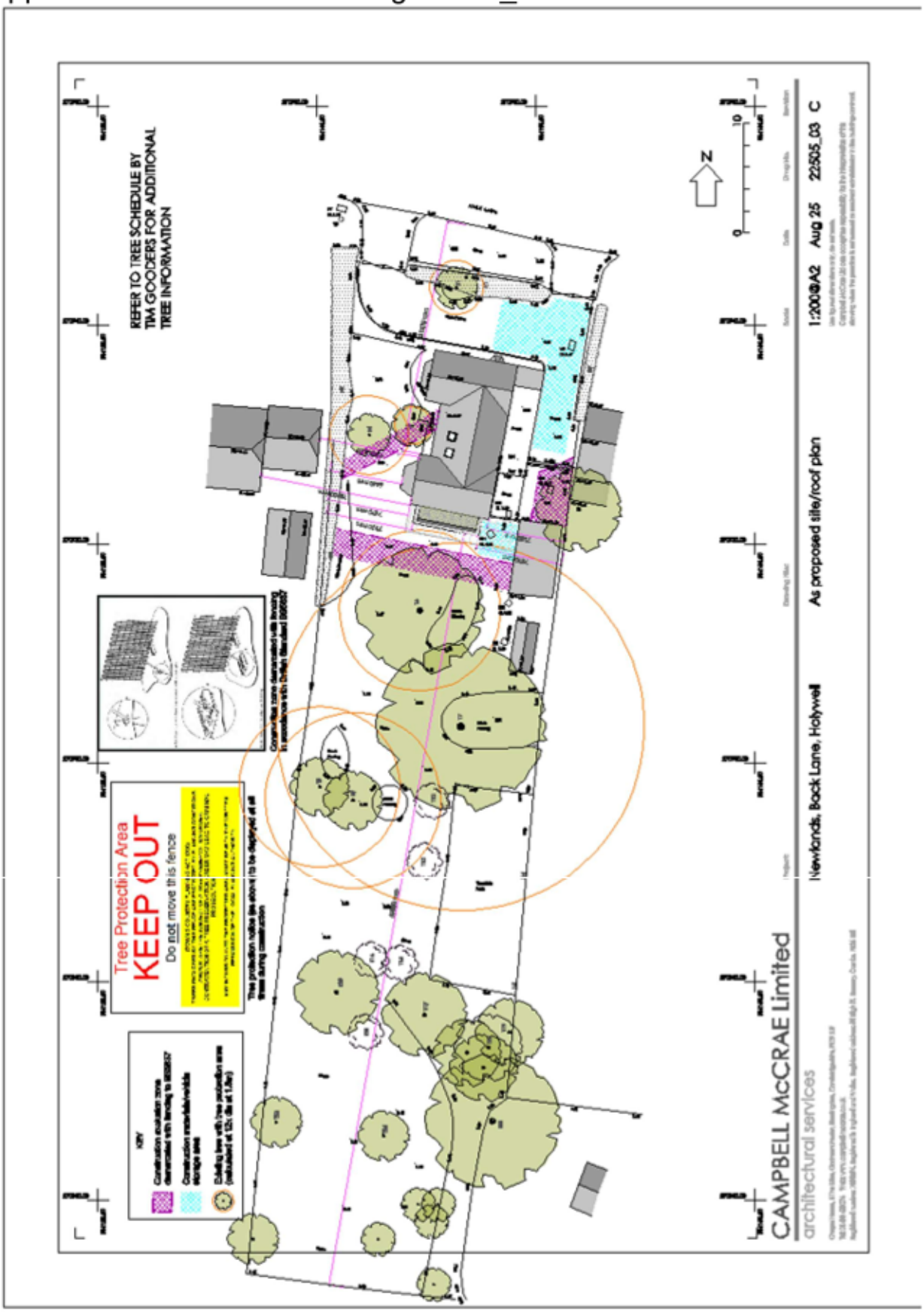

Appendix 3 – Tree Schedule (added trees in adjoining property)

Reference	Species/Description	Diameter @1.5M in cm	Height M	Comment
T1	White Beam	10.2	3.5	
T2	Oak	70.0	6	Outside curtilage
T3	Bridel Tree	7.0	2.2	
T4	Catalpa (Indian Bean tree)	15.0	2.5	Multi Stem grown as shrub
	" "	15.3		
	" "	9.5		
T5	Hazel coppice	N/A		
T6	Liquid Amber	30.6	8	
T7	Walnut	70.0	14	Multi Stem
	" "	47.7		
T8	Ash	30.6	10	Multi Stem
	" "	26.7		
T9	Ash	33.4	10	
T10	Plum	14.6	5	
T11	Laurel	N/A	3.4	Multi stem grown as high hedge
T12	Hazel coppice	N/A		
T13	Hazel coppice	N/A		
T14	Hazel coppice	N/A		
T15	Hazel coppice	N/A		
T16	Hazel coppice	N/A		
T17	Bramley Apple			Multi Stem
	" "			
T18	Ash			In hedge line

Reference	Species/Description	Diameter @1.5M in cm	Height M	Comment
T17	Bramley Apple	27.4	3.5	Multi Stem
	" "	24.8		
T18	Ash	25.8	9	In hedge line
T19	Plum	14.0	4	In hedge Line
T20	Variegate Maple	17.2	7	
T21	Copper Sycamore	10.5	7	
T22	European Silver Birch	15.9	9	
T23	Hazel coppice	N/A		
T24	Oak	4.5	2	
T25	Hazel coppice	N/A		
T26	Liquid Amber	8.6	5	
T27	Himalayan Silver Birch	10.2	6	
T28	Himalayan Silver Birch	10.2	6	
T29	Himalayan Silver Birch	11.8	6	
T30	Willow Screen	N/A		
T31	Ash	270.5	9	In Boundary, Note outside fence
T32	Bamboo	N/A		
T33	Hawthorne	15.6	6	On boundary
T34	Ash	N/A		Outside Curtilage
T35	Sweet Chestnut	21.0	6	
NOTE: these trees are outside curtilage				
Maylands 1	Fig	30	8	Outside Curtilage 5m from boundary
Maylands 2	Bay	30	9	Outside Curtilage 0.7m from boundary
Maylands	Ginkgo	45	10	Outside Curtilage 8m from boundary

CAUTION

PROTECTED TREE

Tree Protective barriers are essential to protect tree roots from soil compaction, contamination, poisoning, etc.

Tree Protective Barriers MUST NOT BE REMOVED or REPOSITIONED unless permitted to do so by the Local Planning Authority (LPA).

The barriers MUST remain in place until completion of the development or such earlier time as agreed by the LPA.

PROSECUTION may result from a failure to adhere to these instructions.

The Tree Officer (HDC 01480388424 or Voice Bot Service on 01480 775799

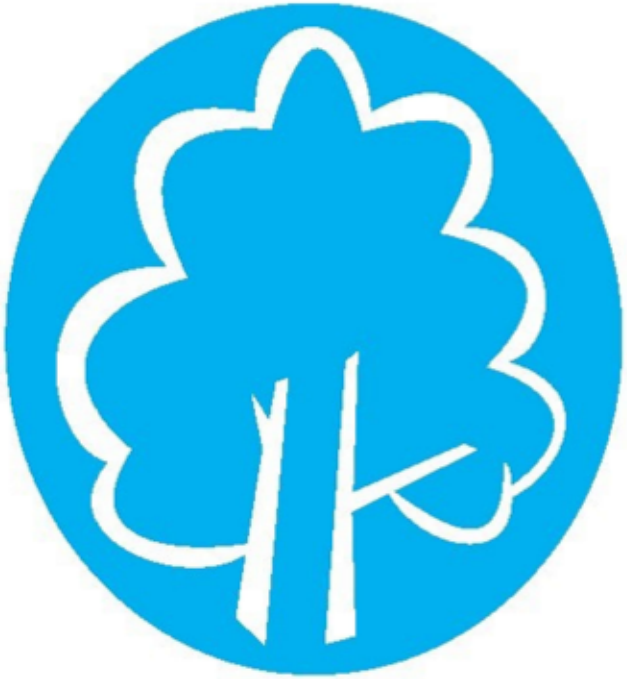

PROTECTIVE FENCING. THIS FENCING MUST BE MAINTAINED IN ACCORDANCE WITH THE APPROVED PLANS AND DRAWINGS FOR THIS DEVELOPMENT.



TREE PROTECTION AREA
KEEP OUT !

(TOWN & COUNTRY PLANNING ACT 1990)
TREES ENCLOSED BY THIS FENCE ARE PROTECTED BY PLANNING CONDITIONS AND/OR ARE THE SUBJECTS OF A TREE PRESERVATION ORDER.
CONTRAVENTION OF A TREE PRESERVATION ORDER MAY LEAD TO CRIMINAL PROSECUTION

ANY INCURSION INTO THE PROTECTED AREA MUST BE WITH THE WRITTEN PERMISSION OF THE LOCAL PLANNING AUTHORITY

Appendix 5 – Site Supervision / Site Visit Record

Arboricultural Consultant's Development Site Monitoring Form

Arboricultural Consultant's Details: Company name/address Consultant's name tel: fax: mob:	
Development site address:	Local Planning Authority (LPA):
LPA Case Officer:	LPA Tree Officer:
Developer's details: Company name/address Developer's name tel: fax: mob:	

Stage of development (√):

	Pre-development works		Development works		Post-development works	
Tree works	☐	Demolition	☐	Rectifying tree damage/pruning	☐	
Protective fencing/tape	☐	Grading/muck away	☐	Hard landscaping/walls/drives	☐	
Fencing signage	☐	Placing portacabin	☐	Removal of protective fencing etc	☐	
Ground protection	☐	Excavations/services	☐	Soft landscaping	☐	
Temporary haul road	☐	Construction works	☐	Special surfacing	☐	Tree planting ☐

Findings:	
Action taken:	
Further action required/recommendations:	
Comments:	
Date of site visit:	Date of next site visit:

Date sent to Local Planning Authority Case Officer _____

Appendix 6 – Key Messages for Site Induction

Construction and Trees



Why is Fencing Erected Around Trees?

1. The major cause of damage to trees on construction sites is due to **soil compaction**.

2. Roots use the spaces between soil particles to obtain Oxygen, Water and Nutrients.

3. Heavy plant and machinery compresses (compacts) the soil, squashing out the air spaces and preventing root function.

4. A compacted soil structure will stay compacted.

5. Consequently the tree suffers and will show signs of branch die-back.

6. Symptoms such as die-back may take several years to appear.

7. Soil compaction over roots can be prevented by maintaining a fenced exclusion zone over the tree roots.

8. The exclusion zone distance is calculated using British Standard 5837.

9. Protective Fencing is installed at the calculated distance.

10. Protective Fencing is a condition of planning approval, if it is removed or repositioned the construction firm is in breach of a condition and may be subjected to legal action.

Common causes of Tree Death

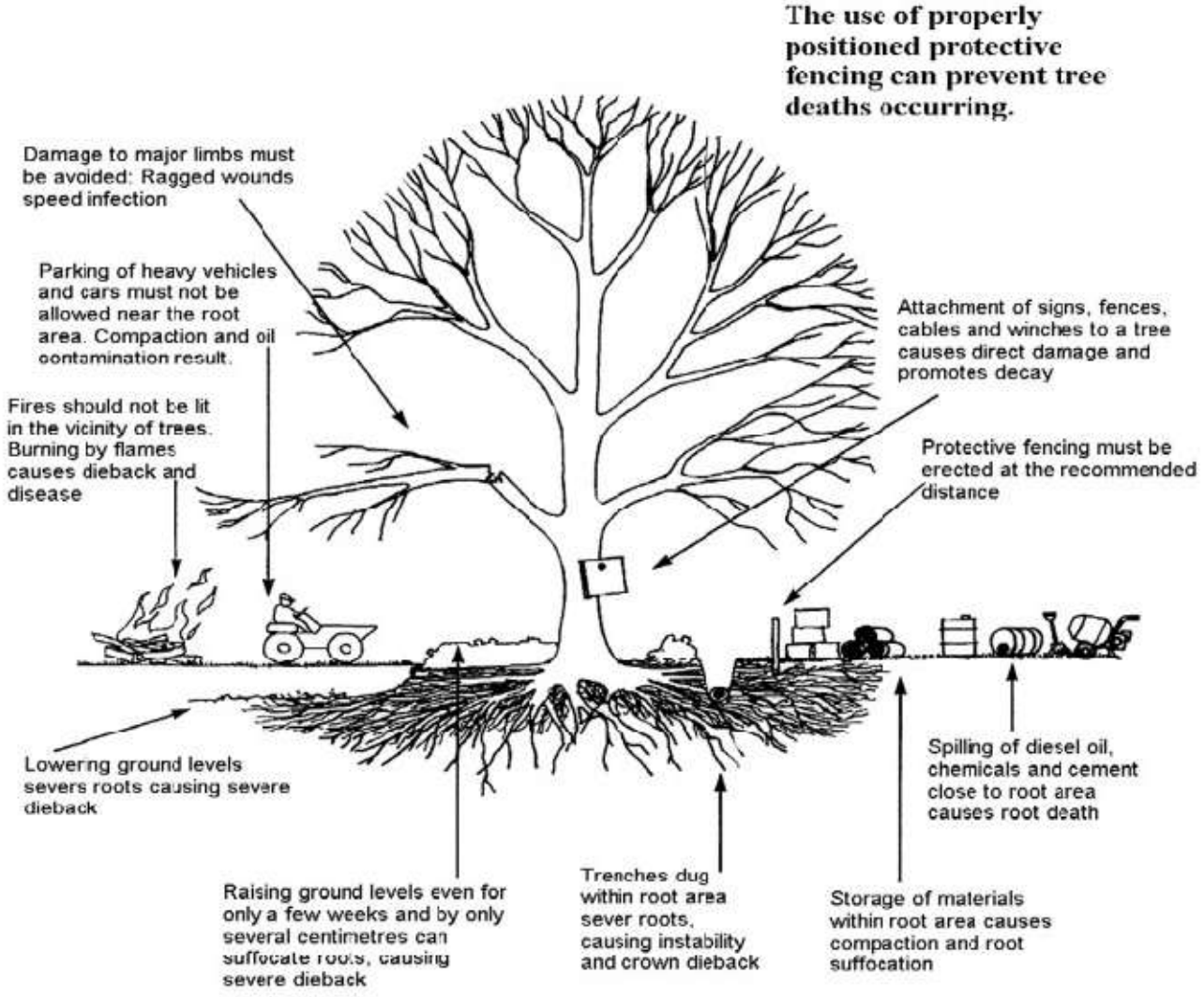

Please use copies of this as an on-site poster for personnel

Appendix 7 Tree Cluster Maylands

