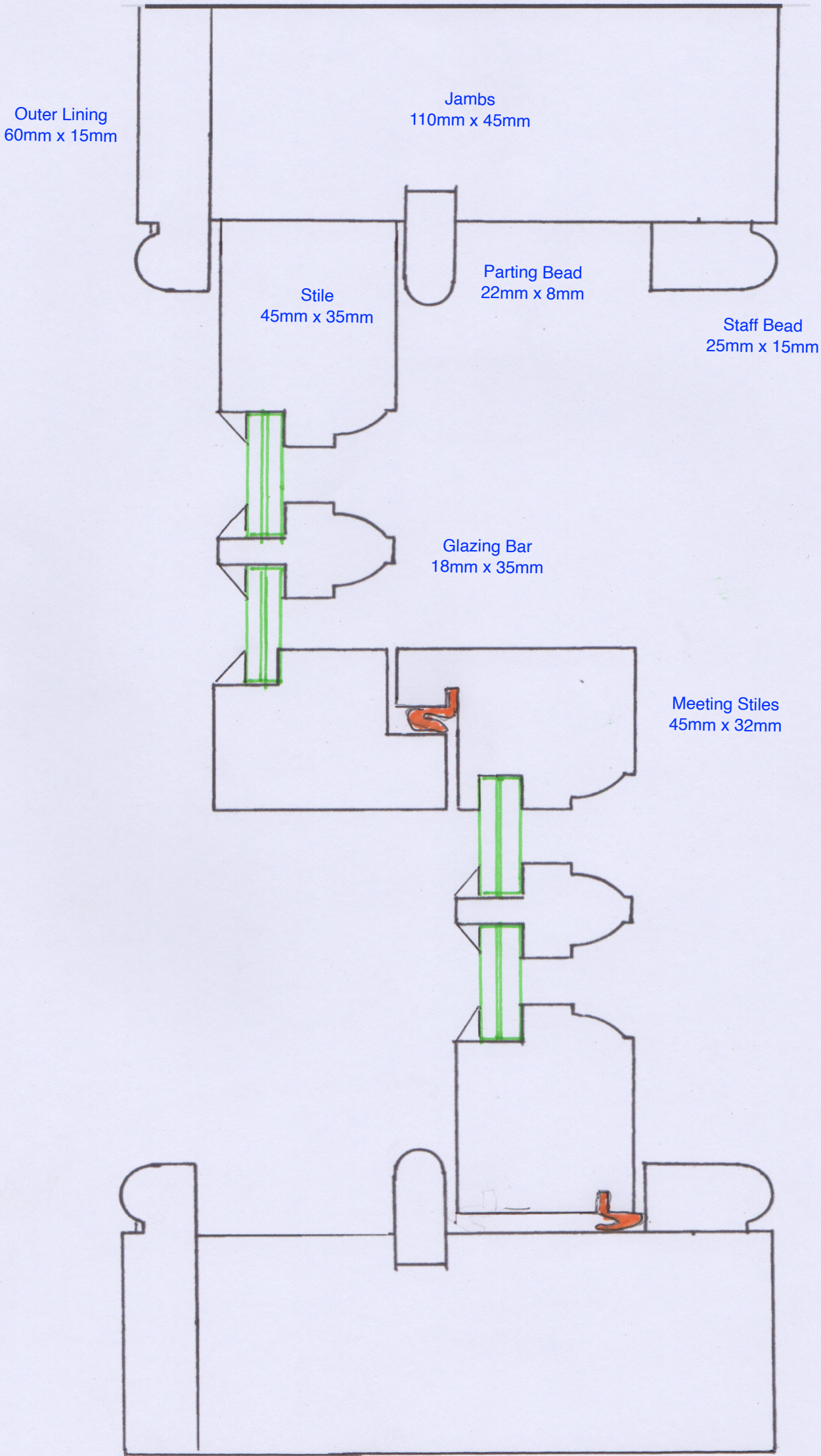
Outer Lining
60mm x 15mm
Jambs
110mm x 45mm
Parting Bead
22mm x 8mm
Stile
45mm x 35mm
Staff Bead
25mm x 15mm
Glazing Bar
18mm x 35mm
Meeting Stiles
45mm x 32mm