Tree Protection Fencing

Tree protection fencing is to be installed at the positions shown at the commencement of works, before any ground works or soil stripping are carried out and before vehicles or materials are brought onto site.

The fencing will consist of a robust framework which is well braced to resist impacts as shown. The areas enclosed are to be maintained as a total exclusion zone to all construction activity. All-weather warning notices will be attached to the fencing to clearly identify the area as a tree protection exclusion zone into which access is not permitted.

No working activity, storage of materials, ground level changes, excavations or vehicular access is permitted within the protected area. Once erected, the protected area are to be regarded as sacrosanct and the fencing must not be removed or altered unless recommended by the project Arboriculturist and, where necessary, approval from the local planning authority.

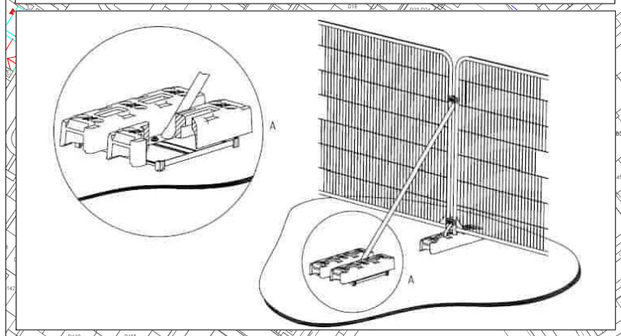

Residential layout shown for illustrative purposes only

LEGEND:

- Category A - Trees of High Quality (TX-A)
- Category B - Trees of Moderate Quality (TX-B)
- Category C - Trees of Low Quality (TX-C)
- Trees Proposed for Removal (TX-U)
- Tree Trunk
- Tree Canopy Spread
- Tree Protection Fencing

Note: The following trees were not plotted on the provided topographical survey: T34, T39, T40 and groups G1, G2, G3 and G4.
The positions for these trees as shown on this plan are therefore indicative only and should be confirmed on site if accurate locations are required.

RammSanderson ARBORICULTURE

Client :
Bloor Homes

Project:
Ermine Street, Huntington

Drawing Title :
Tree Protection Plan

Drg No.	Rev :
RSE_8095_TPP1	V1

Drn By :	Scale :	Date :
AL	1:1000@A1	17/04/2024

RammSanderson Ltd
East Midlands: Osprey House, Mellin Way, Ilkeston, DE7 4RA T: 0115 930 2493
West Midlands: Chase View Barn, Dunston Business Village, Stafford, ST18 9AB T: 01785 711 575
Yorkshire: The Former Library, 10 Leeds Road, Sheffield, S9 3TY
www.rammsanderson.com