Do not scale from this drawing
The Contractor is to check all dimensions
on site and report discrepancies to the Architect
All rights described in Chapter IV of the
Copyright, Designs and Patents Act 1988 have
been generally asserted ©

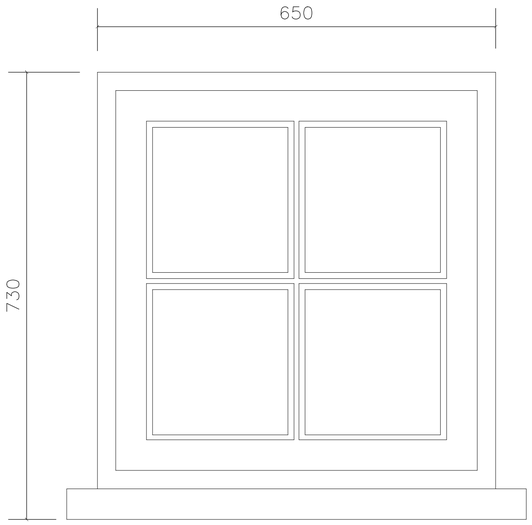

Windows W1,W2, W3

Scale 1:5

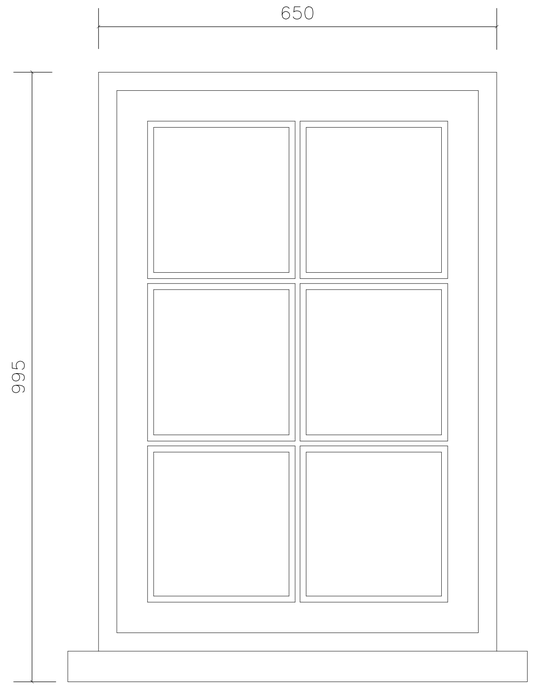

Window W4

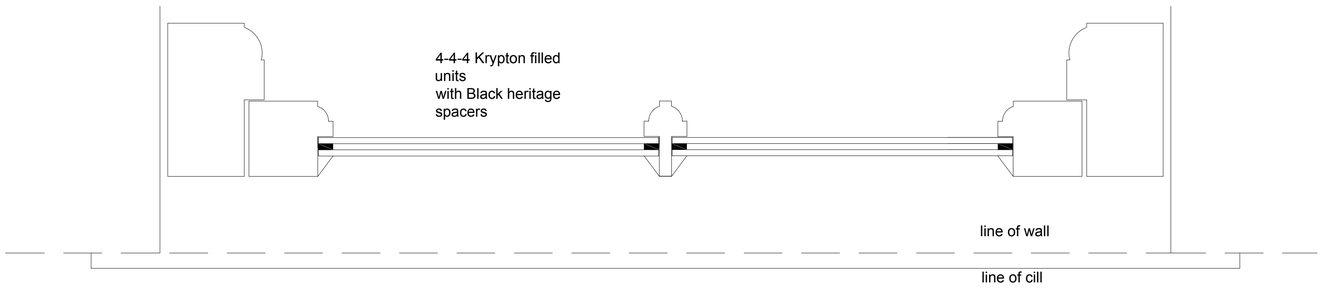

Sectional plan

Scale 1:2

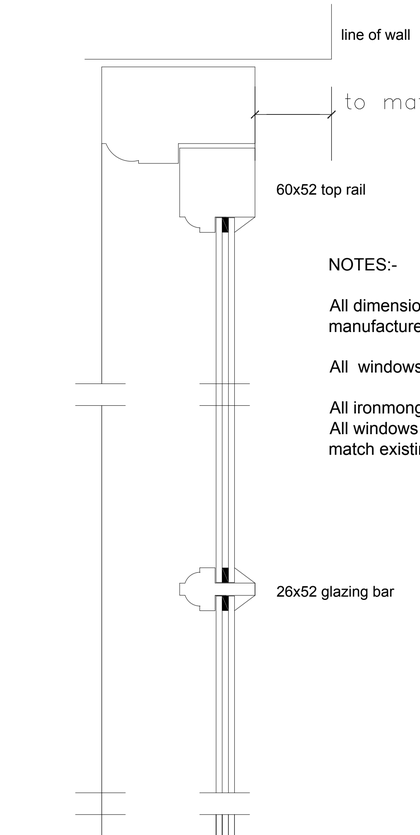

Section

Scale 1:2

NOTES:-

All dimensions are to be fully checked by the window manufacturer prior to the manufacture of any windows.

All windows to have 4-4-4 double glazed units.

All ironmongery to match existing
All windows to be softwood and factory painted - Colour to match existing

PROJECT

Chestnut Farm House
28 Hamerton Road
Alconbury Weston

DRAWING

Replacement window details

scale	date
1:5:2@A1	November 2024

number

03-TKE-24