CIVIL / STRUCTURAL DESIGN RISK MANAGEMENT

Abnormal or unusual residual risks associated with the design outcomes shown on this drawing are:-

RSK LDE LTD has followed its Design Risk Management process for Hazard Elimination and Risk reduction in developing the designs shown on this drawing.
Abnormal or unusual residual risks may be shown above where it is considered that such risk may not normally be expected by competent persons engaged on work of this nature or type.

Notes:

General

1. This drawing presents the electrical vehicle ducting route requirements within the dedicated site boundary.
2. This drawing is to be read in conjunction with all relevant Architects and Engineer's drawings.
3. This drawing is to be used for EVCP ducting route purposes only.
4. Ducting will be maintained and managed by U&C BTR Living Ltd
5. Occupiers of the properties will be responsible for the installation and future maintenance of EV chargers.

Information relied upon:
- Saunders Boston Architects site layout drawing number 1890-SBA-XX-XX-DR-A-503 REV J.
- Associated Surveying Consultants Topographic Survey drawing number ASC.21.383.

Legend

- Site Boundary
- External Ground Cover to Future EV Charging Point (Rodding Eye)
- Wall Mounted External Cover to Future EV Charging Point
- EVCP Ducting Route

Rev.	Date	Amendment	Drawn	Chkd.	Appd.
C04	13.11.2024	Drawing updated to reflect planning comments.	LN	JC	AM
C03	11.10.2024	Drawing updated to reflect client comments.	LN	JC	AM
C02	09.09.2024	Drawing updated to reflect client comments.	JC	-	
C01	27.08.2024	First Issue	JC	AM	

RSK
LAND & DEVELOPMENT ENGINEERING LTD
18 Frogmore Road
Hemel Hempstead
Hertfordshire
HP3 9RT
United Kingdom
Tel: +44 (0) 1442 437500
Fax: +44 (0) 1442 437550
Email: info@rsk.co.uk
Web: www.rsk.co.uk

Client: LODGE PARK LIMITED

Project Title: WINTRINGHAM PARCEL 5

Status: CONSTRUCTION

Drawing Title: ELECTRIC VEHICLE DUCTING PLAN

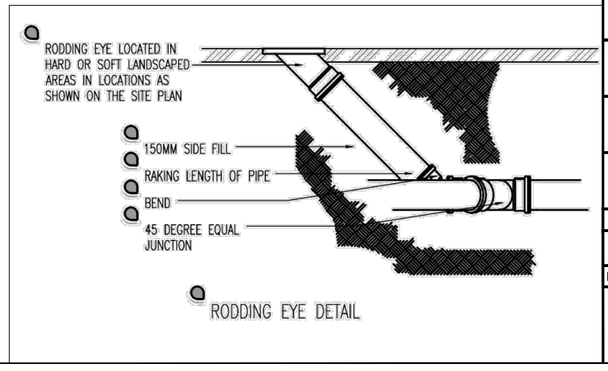

RODDING EYE DETAIL

Drawn	Date	Checked	Date	Approved	Date
JC	27.08.2024	AM	27.08.2024		

Scale	Orig Size	Dimensions
1:500	A1	M

Project No.: 890807
Drawing File: X-RSK-ECP ducting.dwg

Drawing No.							Rev.
890807	RSK	P5	XX	DR	C	5001	C04
Project	Orig.	Vol./Sys.	Lev./Loc.	Type	Role	Draw. No.	

Scale 1:500
0 5 10 15 20 25m