



Outline of Priory House

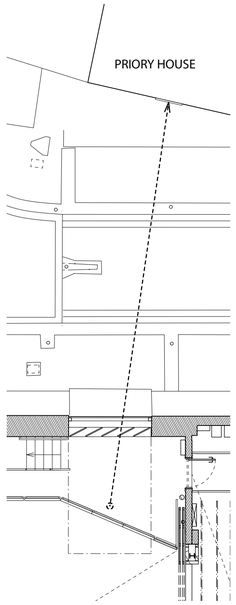



Outline of Priory House

EXTERNAL

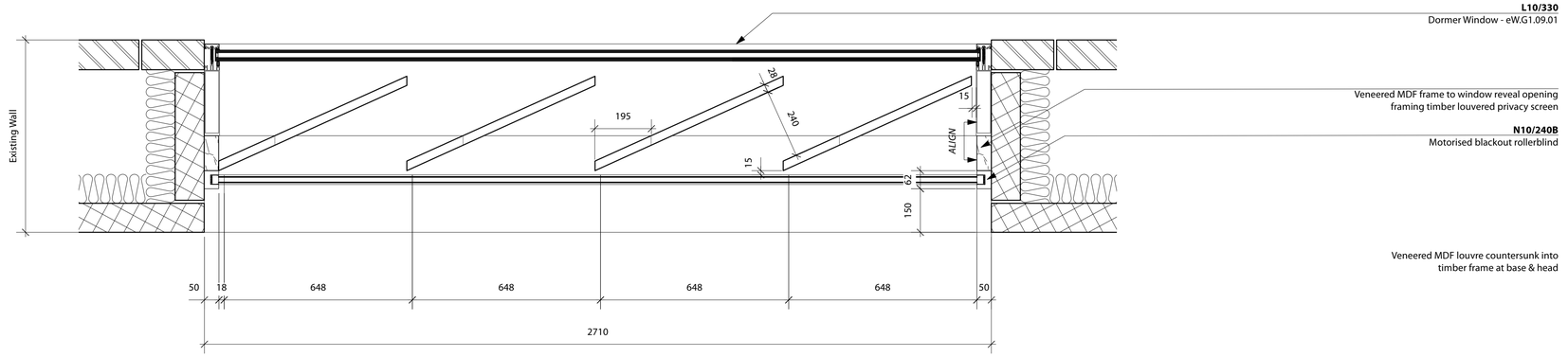

INTERNAL

3 Auditorium Privacy Screen Plan
Scale: 1:10

CONSTRUCTION NOTES

ALL ARCHITECT'S DRAWINGS TO BE READ IN CONJUNCTION WITH STRUCTURAL ENGINEER'S AND M&E ENGINEER'S DRAWINGS FOR COORDINATION

ALL LEVELS A.O.D UNLESS OTHERWISE STATED

Areas refer to 295_SCH_001 & 002
Demolitions refer to 295_SCH_003
Finishes refer to 295_SCH_004
Doors refer to 295_SCH_005
Windows refer to 295_SCH_006
Ironmongery refer to 295_SCH_007
FF&E refer to 295_SCH_008
Sanitaryware refer to 295_SCH_009

AOC Architecture Ltd
Unit 61, Regent Studios, 8 Andrews Road,
London E8 4QN
t. +44 20 7739 9950
www.theaoc.co.uk studio@theAOC.co.uk

SCALE
0 0.1 0.2 0.3 0.4 0.5 M

All dimensions in millimetres unless otherwise stated.
All dimensions to be checked on site.
Do not scale from this drawing except for planning purposes.
Any errors to be reported to the architect immediately.
Copyright reserved.

NOTES

No.	Revision / Issue	Drawn by	Checked by	Date
P1	Planning Condition Issue	AM	NS	13.02.25

Project Title
295 St Neots Priory Centre
Priory Lane, Saint Neots, PE19 2BH

Drawing Name PROPOSED Auditorium Privacy Screen Details
Drawing Status PLANNING
Scale 1:5 @ A1 / 1:10 @ A3
Drawing No. 295_DD_213
Rev. P1