DISCLAIMER:

This drawing is the property of the applicant and is issued on the condition that it is not reproduced, disclosed or copied to any individual without written consent from the applicant.

No Dimensions are to be scaled from this drawing EXCEPT FOR PLANNING PURPOSES.

© COPYRIGHT MT ARCHITECTURE LTD

Issued for:

Rev:	Date:	Details:	Drawn:	Checked:

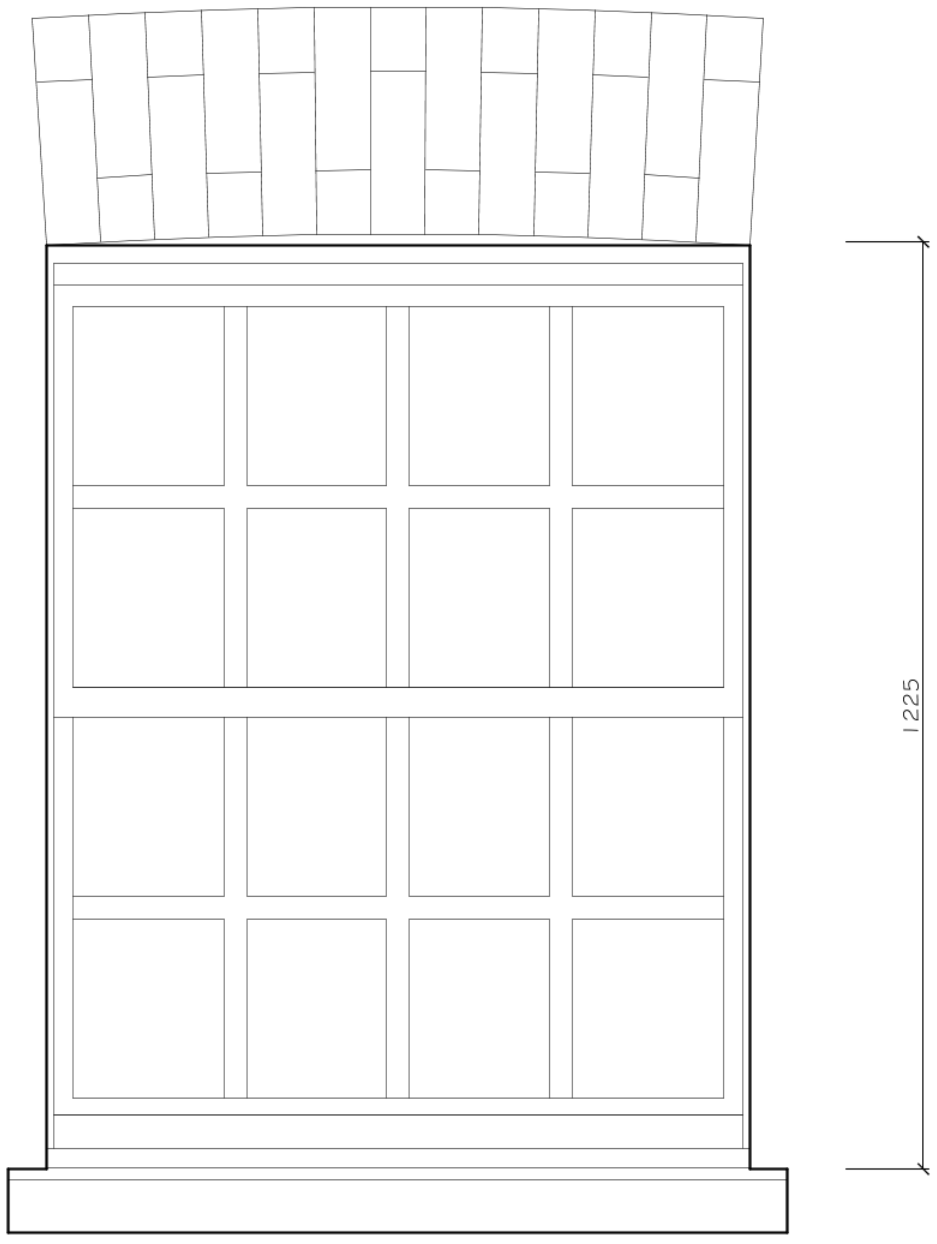

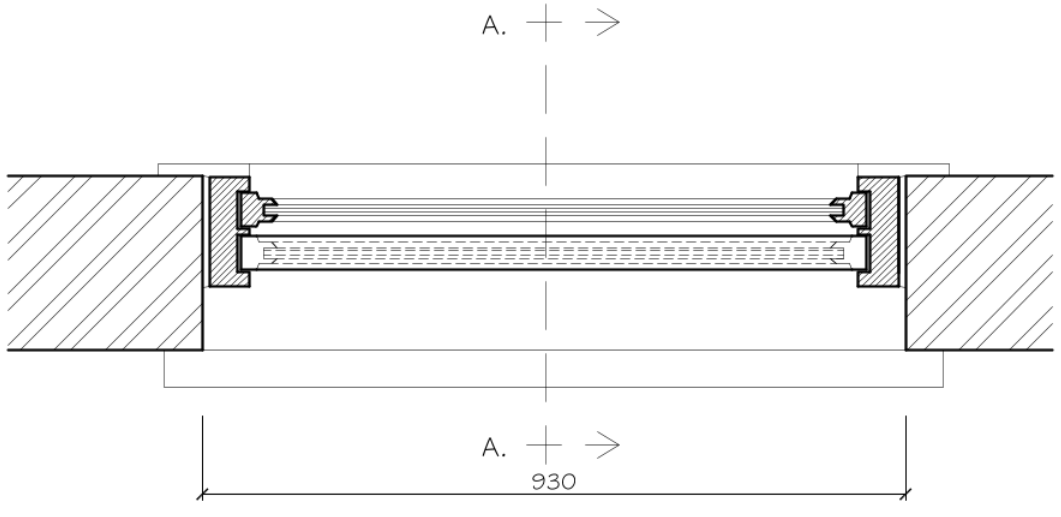

PROPOSED GA PLAN
1:10

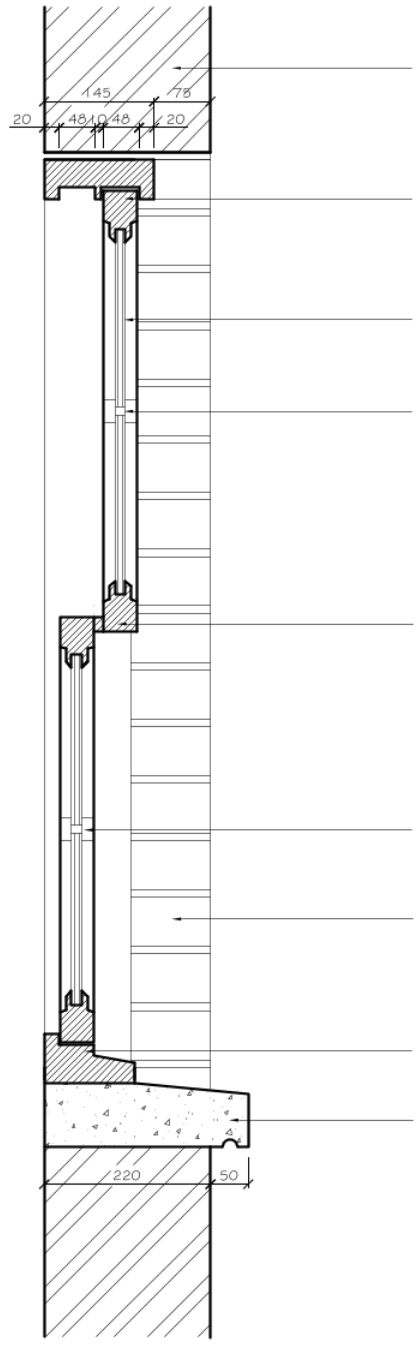

EXISTING 9 INCH SOLID (MASONRY) WALL.

PROPOSED BOX SASH SLIDING WINDOWS.
TIMBER PAINTED (WHITE).
TOP RAIL & STYLES 55 x 45mm.

DOUBLE GLAZING UNIT (4mm GLASS AND 6mm BAR).
FITTED WITH FLEXI TAPE AND TIMBER BEADS.

30 x 45mm GLAZING BAR.

40 x 45mm MEETING RAIL (INC
BRUSHES / DRAUGHT EXCLUDER).

30 x 45mm GLAZING BAR.

PROPOSED WINDOW AND FRAMING
SET OUT FROM THE INTERNAL REVEAL.

90 x 45mm BOTTOM RAIL.

EXISTING 1 NO COURSE STONE CILL RETAINED.

PROPOSED PROFILE SECTION
1:10

MTArchitecture Ltd
DEPENDABLE ARCHITECTURAL SERVICES
7 Ream Close, Eynesbury, St Neots, Cambridgeshire PE192HE
www.mt-architectureltd.co.uk / info@mt-architectureltd.co.uk
01480 474708 / 07921504260

Scale: 1:10@A3	Drawing Title: PROPOSED FRONT WINDOWS PLAN, ELEVATION & SECTIONAL DETAILS.
Date: APRIL 2025	Project Title: Ms RACHEL TEMPLE & MR JAMIE BONESS, 17 TAYLORS LANE, BUCKDEN PE19 5UP.
Drawing no: 025033/12	Revision: -