HAYDEN'S
Arboricultural Consultants

Tree Survey and Arboricultural Impact Assessment
In Accordance with BS 5837:2012

Project No **12091**	**Land at George Street, Station Quarter, Huntingdon, Cambridgeshire**		
Client:		Vistry South East Midlands	
Prepared by:		Matthew Plane-Da'Silva	
Date of Report:	19/01/2026	Revision:	Original

Hayden's Arboricultural Consultants Ltd, Units 3-5 Moseley's Farm Business Centre
Fornham All Saints, Bury St Edmunds, Suffolk IP28 6JY

Telephone: 01284 765391 Email: info@treesurveys.co.uk
www.treesurveys.co.uk

Summary

In this circumstance it is intended to construct new residential units alongside associated infrastructure. The arboricultural related implications of the proposal are summarised in Tables 1 and 2 below, and detailed where necessary within the report.

All trees and landscape features that are to remain as part of the development should suffer no structural damage provided that the findings within this report are complied with in full.

Table 1 - Construction and ongoing constraints from an arboricultural perspective (subject to necessary tree surgery being completed):

Potential Design/ Build Constraints	Arboricultural Impact?	Comments/Solution
Construction Access	No	The site access is unencumbered by Root Protection Areas (RPA) of any trees to be retained.
Demolition	No	There is no demolition associated with this proposal.
New Structures	Yes	Please see item no. 4.1.
New Surfaces	Yes	Please see item no. 4.2.
Services	Yes	Please see item no. 4.3.
Compound	No	Please see item no. 4.4.
Phasing	Yes	Please see item no. 4.5.

Table 2 - Tree surgery and felling necessary to facilitate the proposal:

Feature No	Surgery or Fell	Reason for Works	BS Category
A001	Surgery (Root pruning)	Construction of a 0.4m concrete gravel board fencing	B
T001	Fell	Installation of wall and proposed footpath	B
T002	Surgery	Undertake air spading within the RPA for the excavation required for installation of EV charging ducts. Crown raise to 2m to allow clearance for installation works.	B

Given the above, there are no overt or overwhelming arboricultural constraints that can be reasonably cited to preclude the proposed construction.

© 2026 Hayden's Arboricultural Consultants Limited

Contents

1.0 Introduction

2.0 The Site

3.0 Tree Survey

4.0 Arboricultural Impact Assessment (Additional or Specific Comments)

5.0 Limitations & Qualifications

6.0 References

7.0 Appendices

© 2026 Hayden's Arboricultural Consultants Limited

1.0 Introduction

1.1 Purpose

1.1.1 As part of the United Kingdom planning process, applicants are required to supply local planning authorities with a detailed evaluation of how their proposals will impact trees. The nationally recognised procedure for doing this is laid out in *BS5837:2012 "Trees in relation to design, demolition and construction – Recommendations".* In summary, this must include the following information as a minimum: -

- A Tree Survey and Tree Constraints Plan.
- An Arboricultural Impact Assessment of sufficient detail to confirm the feasibility of the design from a tree perspective.
- A scaled Tree Retention and Removal drawing showing retained trees and their root protection area on the proposed layout.

1.1.2 This report has been prepared to ensure that this information is provided to the Local Planning Authority in a straightforward and clear way so that they can make an informed decision about how (if at all) trees are affected.

1.1.3 When planning permission is granted it is typically the case that the Local Planning Authority will require specific conditions to be fulfilled. This means that a subsequent detailed Arboricultural Method Statement and Tree Protection Plan may be required. This will be detailed on the Local Planning Authority's decision notice.

1.2 Scope

1.2.1 In accordance with the above, Vistry South East Midlands have commissioned Hayden's Arboricultural Consultants to prepare a Tree Survey and Constraints Plan, Arboricultural Impact Assessment and scaled Tree Retention and Removal drawing for the existing trees at Land at George Street, Station Quarter, Huntingdon, Cambridgeshire.

1.2.2 Unless stated within the survey, all trees were inspected from ground level with no climbing inspections undertaken. As such, the findings are of a preliminary nature. It is not always possible to access every tree and therefore some measurements may have to be estimated.

1.2.3 The trees were inspected on the basis of "*Visual Tree Assessment" (Mattheck & Breloer - 1994)* and *National Tree Safety Group (2024). Common sense risk management of trees: Guidance on trees and public safety in the UK for owners, managers and advisers. 2nd edn,. Edinburgh: Forest Research.*

1.2.4 Whilst this is an arboricultural report, comments relating to non arboricultural matters are given, such as built structures and soil data. Any opinion thus expressed should be viewed as provisional and confirmation from an appropriately qualified professional sought. Such points are clearly identified within the body of the report.

© 2026 Hayden's Arboricultural Consultants Limited

1.3 Documentation

1.3.1 The following documentation was provided prior to the commencement of the production of this report;

- Email of instruction from Matthew Finnie dated 22/10/2025.
- Definition of site boundary, description of requirements/deadlines.
- Topographical survey.
- Proposed site layout.

2.0 The Site

2.1 Overview

2.1.1 The site is Land at George Street, Station Quarter, Huntingdon, Cambridgeshire.

2.2 Soils

2.2.1 The soils type commonly associated with this site are lime rich loams and clays with impeded drainage. They are of high fertility and support base-rich pastures, and classic 'chalky boulder clay' ancient woodland type habitats. This soil type constitutes approximately 5.3% the total English land mass.

2.2.2 The data given was obtained from a desktop study which provides indications of likely soil types. By definition, this information is not comprehensive and therefore any decisions taken with regards the management, usage or construction on site should be based on a detailed soil analysis.

2.2.3 Further to item 2.2.2, this report provides no information on soil plasticity. It may be necessary for practitioners in other disciplines (e.g. engineers considering foundation design) to obtain this data as required.

2.3 Statutory Tree Protection

2.3.1 Information on any Local Planning Authority or Forestry Commission controlled statutory tree protection (Tree Preservation Orders, Conservation Areas and Felling Licenses etc) is recorded on the attached drawing no. 12091-D-AIA.

2.3.2 Further details regarding any existing Statutory Tree Protection is recorded at Appendix B.

© 2026 Hayden's Arboricultural Consultants Limited

3.0 Tree Survey

3.1 The tree survey was carried out on 07/11/2025 in accordance with *BS5837:2012 "Trees in relation to design, demolition and construction – Recommendations",* the relevant qualitative and quantitative tree data was recorded in order to assess the condition of the existing trees and their constraints upon the proposed development.

3.2 A topographical survey was provided which showed the position of the trees on site. It should be noted however that topographical surveys are not always comprehensive and sometimes it is considered appropriate to record details of trees and landscape features omitted from or beyond the scope of the plan. If this circumstance occurs, the location of the individual tree or landscape feature is estimated. The position of each tree is shown on the attached drawing no. 12091-D-AIA.

3.3 In order to provide a systematic, consistent and transparent evaluation of the trees included within this survey, they have been assessed and categorised in accordance with the method detailed in item 4.3 of *BS5837:2012 "Trees in Relation to Design, Demolition and Construction - Recommendations"*. For further information, please see the attached Explanatory Notes.

3.4 The detailed assessment of each tree and its work requirements with priorities are listed in the attached Schedule of Trees.

3.5 In accordance with item 4.2.4 (c) of BS5837:2012, the items inspected and detailed within this report have been selected for inclusion due to the likely influence of any proposed development on the trees, rather than strictly adhering to the curtilage of the site. However, it must be understood that there may be trees beyond the site and not included in this survey which may exert an influence on the development. Where works for cultural, health and safety, quality of life, or development purposes have been recommended on trees outside the ownership of the site, these can only progress with the agreement of the owner, except where it involves portions of the trees overhanging the boundary.

© 2026 Hayden's Arboricultural Consultants Limited

4.0 Arboricultural Impact Assessment (Additional or Specific Comments)

4.1 New Structures

4.1.1 Construction of a 0.4m concrete gravel board fencing marginally encroaches within the calculated RPA of the following feature to be retained – A001. Given the minor extent of the intrusion at this location it is considered appropriate to undertake linear root pruning as part of the access facilitation pruning (AFP) works.

To undertake linear root pruning the following guidelines as set out in BS5837;2012 shall be followed:

- The excavation shall be dug by hand or with an air spade as per the specified design. This may also include the use of a vehicle mounted soil vacuum. If the soil is not able to be excavated by an air spade or soil vacuum, then all excavation work must be completed using hand tools.

- Roots occurring within the excavation, smaller than 25mm in diameter, may be pruned back to the side wall of the trench by making a clean cut with suitable sharp tools such as bypass secateurs or pruning saw.

- Roots occurring in clumps or that are over 25mm in diameter should only be severed following consultation with the monitoring arboricultural consultant.

- Should the trench be left open for longer than a period of 2 hours, the live roots will be wrapped in damp hessian to prevent the drying out or desiccation of roots. The hessian may need to be re-soaked dependent on the weather conditions and length of time the excavated area remains exposed.

4.2 New Hard Surfaces

4.2.1 Installation of new hard surfaces encroach within the RPA of the following item to be retained – T002. Provided that these work with finished levels and required load bearings without cutting into the ground, the surfaces should be attended to by the use of “no dig” construction methods. In the detailed Arboricultural Method Statement & Tree Protection Plan, Hayden’s Arboricultural Consultants will supply a sample design of “no dig” surfacing. However, the exact specification (adhering to the principles of the sample design) must be designed by a Civil Engineer who can confirm that the finished levels and load bearings are achievable with this type of design without cutting into the ground. In order to protect the RPA of the affected trees, these areas should be constructed as a first phase of the development – i.e. immediately after the necessary tree surgery has been completed and protective fencing erected. It is recognised that the final top dressing of the hard surfaces could be added at the completion of the project, however during the construction phase the permeable surface must be sealed and protected to prevent contamination and compaction. Whatever method of sealing and protection is used, this must be removed at the completion of construction to allow for moisture penetration and gaseous exchange. Alternatively, the protective fencing could be re-sited to the edge of the RPA of these trees and the “no dig” construction completed as a final phase of development.

© 2026 Hayden’s Arboricultural Consultants Limited

4.2.2 As part of the proposal it is also intended to create a trim trail through A001. It is Hayden's understanding that this will be an informal soft landscaping path and therefore not impact the trees contained with in the feature. In order not to adversely impact the retained trees, the foot path is currently indicated as indictive and will be routed around trees.

4.3 Services

4.3.1 As shown on drawing no. 12091-D-AIA it is proposed to install EV charging ducts. These are located in the root protection area of T002. In order to carry out the installation of the charging ducts the use of air spading should be implemented to the required depth to ensure minimal disturbance to the rooting material. This should be undertaken with arboricultural supervision present and monitored.

4.4 Compound

4.4.1 The site provides adequate internal space to locate a construction compound outside the RPA of any trees and landscape features that are to be retained.

4.5 Phasing

4.5.1 The proposal involves the integration of several complex aspects that affect tree protection (e.g. – but not exclusively – access, movement of materials and the installation of services). For this reason, the project must be carefully phased to ensure the highest level of protection is maintained for retained trees. As part of the detailed Arboricultural Method Statement & Tree Protection Plan, Hayden's Arboricultural Consultants will produce an in-depth phasing recommendation to cover the major operations on site as they affect retained trees.

© 2026 Hayden's Arboricultural Consultants Limited

5.0 Limitations & Qualifications

Tree inspection reports are subject to the following limitations and qualifications.

General exclusions

Unless specifically mentioned, the report will only be concerned with above ground inspections. No below ground inspections will be carried out without the prior confirmation from the client that such works should be undertaken.

The validity, accuracy and findings of this report will be directly related to the accuracy of the information made available prior to and during the inspection process. No checking of independent third-party data will be undertaken. Hayden's Arboricultural Consultants Limited will not be responsible for the recommendations within this report where essential data are not made available or are inaccurate.

This report will remain valid for one year from the date of inspection subject to the recommendations specified within being adhered to. It must also be appreciated that recommendations proposed within this report may be superseded by extreme weather, or any other unreasonably foreseeable events.

Tree surgery should be completed as detailed in the Schedule of Trees. Where this has been identified for reasons other than to permit development, this work should be completed within the advised timescales irrespective of any development proposals.

Tree surgery works may also be proposed as part of this Survey to mitigate any identified problems that may be caused by trees in close proximity to the proposed development. To this end, should these recommendations be overruled, this Survey stands as the opinion of Hayden's Arboricultural Consultants Limited, and therefore any damage or injury caused by trees recommended by this practice for felling or tree surgery works, to which the proposed schedule of works has been altered or the tree has been requested to be retained by the Local Planning Authority, cannot be the responsibility of this practice.

Moreover, if any additional alterations to the property or soil levels are carried out and/or further tree works undertaken other than specified within the report, it will become invalid and a new tree inspection required.

It will be appreciated, and deemed to be accepted by the client and their insurers, that the formulation of the recommendations for the management of trees will be guided by the following: -

1. The need to avoid reasonably foreseeable damage.
2. The arboricultural considerations - tree safety, good arboricultural practice (tree work) and aesthetics.

The client and their insurers are deemed to have accepted the limitation placed on the recommendations by the sources quoted in the attached report. Where sources are limited by time constraints or the client, this may lead to an incomplete quantification of the risk.

Signed:

[redacted]

January 2026
For and on Behalf of Hayden's Arboricultural Consultants Limited

© 2026 Hayden's Arboricultural Consultants Limited

6.0 References

British Standards Institute. (2010). *Recommendations for Tree Work BS3998:2010* BSI, London.

British Standards Institute. (2012). *Trees in Relation to Design, Demolition and Construction – Recommendations BS5837:2012* BSI, London.

Ministry of Housing, Communities & Local Government. (2014). *Tree Preservation Orders and trees in conservation areas.* London: Ministry of Housing, Communities & Local Government.

Mattheck & Breloer, H. (1994). *Research for Amenity Trees No.4: The Body Language of Trees*, HMSO, London.

NHBC Standards (2007) *Chapter 4.2 'Building Near Trees'.* National House-Building Council.

NJUG 4 Guidelines for the planning, installation and maintenance of utility apparatus in proximity to trees. Issued 16 November 2007.

Forestry Commission (2007). *Tree Felling – Getting Permission.* Country Services Division, Forestry Commission, Edinburgh.

Patch, D. Holding, B. (2006) *Arboricultural Practice Note 12 (APN12)*, *Through the Trees to Development.* Arboricultural Advisory and Information Service (AAIS).

Lonsdale, D. (1999). *Research for Amenity Trees No 7: Principles of Tree Hazard Assessment and Management*, HMSO, London.

National Tree Safety Group (2024). *Common sense risk management of trees: Guidance on trees and public safety in the UK for owners, managers and advisers*. 2nd edn. Edinburgh: Forest Research.

© 2026 Hayden's Arboricultural Consultants Limited

7.0 Appendices

Appendix	**A**	Species List & Tree Problems
Appendix	**B**	Statutory Tree Protection Advice & Tree Preservation Order Enquiry/Response
Appendix	**C**	Schedule of Trees
Appendix	**D**	Schedule of Works - Irrespective of Development
Appendix	**E**	Preliminary Schedule of Works to Allow Development
Appendix	**F**	Explanatory Notes
Appendix	**G**	Advisory Information & Sample Specifications

1. BS 5837:2012 Figure 1 - Flow Chart – Design and Construction & Tree Care
2. European Protected Species and Woodland Operations Checklist (v.4)
3. BS 5837:2012 Figure 2 - Default specification for protective barrier
4. BS 5837:2012 Figure 3 - Examples of above-ground stabilising systems

Appendix	**H**	Drawing No 12091-D-AIA.

© 2026 Hayden's Arboricultural Consultants Limited

Appendix A - Species List & Tree Problems

Species List:

Ash	*Fraxinus excelsior*
Beech	*Fagus sylvatica*
Cherry	*Prunus sp*
Hawthorn	*Crataegus monogyna*
Pine	*Pinus sp*

Tree Problems:

This gives a brief description of the problems identified in the attached Tree Survey.

Name: Deadwood	
Symptoms/damage type and cause:	This relates to dead branches in the crown of the tree. In the majority of cases, this is caused by the natural ageing process of the tree or shading due to its close proximity to neighbouring trees. However, in some situations, it may be related to fungal, bacterial or viral infection.
Consequence:	Depending upon the location and mass of dead wood removal of the affected tissue may be necessary to prevent harm to persons or property as the wood will become unstable as it decays and in some circumstances is likely to fall from the tree with little or no warning.
Control:	Detailed monitoring should be undertaken on those trees showing signs of excessive deadwood production to identify the underlying cause.
Species affected:	Most tree species.
Images:	 

© 2026 Hayden's Arboricultural Consultants Limited

Name: *Hedera helix* **(Ivy)**	
Symptoms/damage type and cause:	Ivy may grow to varying degrees on all areas of a tree from the base to the upper crown. It is possible that in doing so it will out-compete the host tree for available light thereby suppressing the host.
Consequence:	This is generally only harmful to the tree on already unhealthy specimens which may be constricted by large ivy stems around the trunk or may have their top growth suppressed by a mass of flowering shoots in the crown. Ivy can also mask potentially dangerous faults on a tree.
Control:	Ivy should only be removed if absolutely necessary because it provides abundant cover to wildlife and then by severing twice close to the ground and removing a length of stem thereby causing the gradual dying away of the aerial parts of the plant providing extended benefit to wildlife whist relieving the pressure on the tree.
Species affected:	Most trees can be affected.
Images:	 

© 2026 Hayden's Arboricultural Consultants Limited

Appendix B - Statutory Tree Protection Advice & Tree Preservation Order Enquiry/Response

Statutory Tree Protection Advice

Tree Preservation Order(s)

The Local Planning Authority have deemed it appropriate to provide statutory protection to trees on and/or neighbouring this site through the serving of Tree Preservation Orders (TPO), Ref no 040/87, 18/014 and L/TPO/314. The effect of this on the owners, managers or any persons wishing to undertake work on preserved trees is to require them to obtain written permission from the Local Planning Authority prior to actioning any surgery or felling etc. The purpose of this process is to try to ensure that the works are appropriate, proportionate, and in keeping with the long-term aims of the TPO (as expressed in the original TPO statement) but, given that trees are living organisms, and the locality within which they are set is liable to change, it is often the case that Local Planning Authority decisions relating to TPO applications require regular review to reflect the current situation rather than the historical perspective of the original date of protection.

There are certain circumstances where written permission from the Local Planning Authority may not be necessary before undertaking works. These include;

- Making a tree safe if it is an imminent threat to people or property.
- Removing dead wood, or a dead tree.

Owners, managers or any persons wishing to undertake work as an exemption to the written permission process **are required** to provide the Local Planning Authority with 5 days' notice prior to attending to a tree which they deem as being dead or dangerous; unless such works are required in an emergency. It is the tree owner's responsibility to provide proof that the tree was indeed dead or dangerous should this exception be challenged; hence, it is advisable always to request an inspection by the Local Planning Authority prior to carrying out such operations. Furthermore, and even in the event of an emergency situation, there is still a duty to notify the Local Planning Authority that work has been completed including supplying an explanation of the necessity. Failure to comply with the requirements of TPO legislation can lead to a maximum fine of up to £20,000 per tree in the Magistrates Court. Fines in the Crown Court are unlimited.

NB: If **detailed planning permission** is granted and as part of the relevant approval, works (felling or surgery) to trees protected by a TPO are agreed as acceptable by the Local Planning Authority, no **additional** written permission to proceed will be required provided that (i) the planning permission remains live, (ii) the works are in strict accordance with the specification of the extant planning permission, and (iii) the works are being completed solely to implement the detailed planning permission.

This information was sourced using the Local Planning Authority's Online Mapping System (as instructed by them) and to our best knowledge was current and accurate at the time the information was accessed. We would advise it prudent that before any tree work commences, this is checked directly with the Local Planning Authority to confirm that their online mapping system is definitive.

© 2026 Hayden's Arboricultural Consultants Limited

Conservation Area

The site is located within a locality specifically identified by the Local Planning Authority as a “Conservation Area”. This is a planning designation that seeks to provide control over the built environment, but which also has provision for tree protection. The effect of this on the owners, managers or any persons wishing to undertake work on trees sited within a Conservation Area is to require them to submit 6 weeks written notice detailing the surgery or felling they plan to undertake. No work may be carried during the 6-week period unless written permission has been received from the Local Planning Authority. The Local Planning Authority can only prevent works notified to them within the 6-week period by serving a Tree Preservation Order. If this happens, the owner of the tree has a right to object to the serving of the order.

There are certain circumstances where written permission from the Local Planning Authority may not be necessary before undertaking works. These include;

- Making a tree safe if it is an imminent threat to people or property.
- Removing dead wood, or a dead tree.
- Trees with stem diameters of less than 75mm (measured at 1.5m from ground level). If the works being carried out are to help promote the growth of other trees then trees with stem diameters of less than 100mm (at 1.5m) may be removed or pruned.

Owners, managers or any persons wishing to undertake work as an exemption to the written notification process are **required** to provide the Local Planning Authority with 5 days’ notice prior to attending to a tree which they deem as being dead or dangerous; unless such works are required in an emergency. It is the tree owner’s responsibility to provide proof that the tree was indeed dead or dangerous should this exception be challenged; hence, it is advisable always to request an inspection by the Local Planning Authority prior to carrying out such operations. Furthermore, and even in the event of an emergency situation, there is still a duty to notify the Local Planning Authority that work has been completed including supplying an explanation of the necessity. Failure to comply with the requirements of Conservation Area legislation can lead to a maximum fine of up to £20,000 per tree in the Magistrates Court. Fines in the Crown Court are unlimited.

NB: If **detailed planning permission** is granted and as part of the relevant approval, works (felling or surgery) to trees located within a Conservation Area are agreed as acceptable by the Local Planning Authority, no **additional** written permission to proceed will be required provided that (i) the planning permission remains live, (ii) the works are in strict accordance with the specification of the extant planning permission, and (iii) the works are being completed solely to implement the detailed planning permission.

This information was sourced using the Local Planning Authority’s Online Mapping System (as instructed by them) and to our best knowledge was current and accurate at the time the information was accessed. We would advise it prudent that before any tree work commences, this is checked directly with the Local Planning Authority to confirm that their online mapping system is definitive.

© 2026 Hayden’s Arboricultural Consultants Limited

Felling Licence

All trees within the United Kingdom are protected under the Forestry Acts. In All trees within the United Kingdom maybe subject to protections under the Forestry Acts (principally the Forestry Act 1967). In general, anyone felling more than 5 cubic metres of timber in any calendar quarter requires a Felling Licence from the Forestry Commission. There are exemptions however and these are as follows:-

A Felling Licence is not required in the following instances:

- To fell trees in a garden, an orchard, a churchyard, or a designated open space (Commons Act 1899 and Section 9 of the Forestry Act 1967).
- To carry out surgery operations such as pruning, reduction, dead wooding or pollarding.
- To fell less than 5 cubic metres in a calendar quarter. (Please note that not more than 2 cubic metres in a calendar quarter may be sold).
- To fell trees that are 8 centimetres or less in diameter when measured 1.3 metres from the ground. Trees removed for thinning may have a diameter of up to 10 centimetres and trees managed under a coppice regime may have a diameter of up to 15 centimetres.
- To fell trees previously approved for removal under a Dedication Scheme, or where Detailed Planning Permission has been granted.
- To fell trees to prevent danger or abate a legal nuisance.
- To fell trees in compliance with any obligation imposed by or under an Act of Parliament.
- To fell trees at the request of an electricity operator, because the trees are or will be in such close proximity to installed or about to be installed electric line or electrical plant in accordance with paragraph 9(1)(a) or (b) of Schedule 4 to the Electricity Act 1989.

Substantial fines exist for not complying with the requirements of a Felling Licence.

© 2026 Hayden's Arboricultural Consultants Limited

Tree Preservation Order / Conservation Area Online Mapping Extract

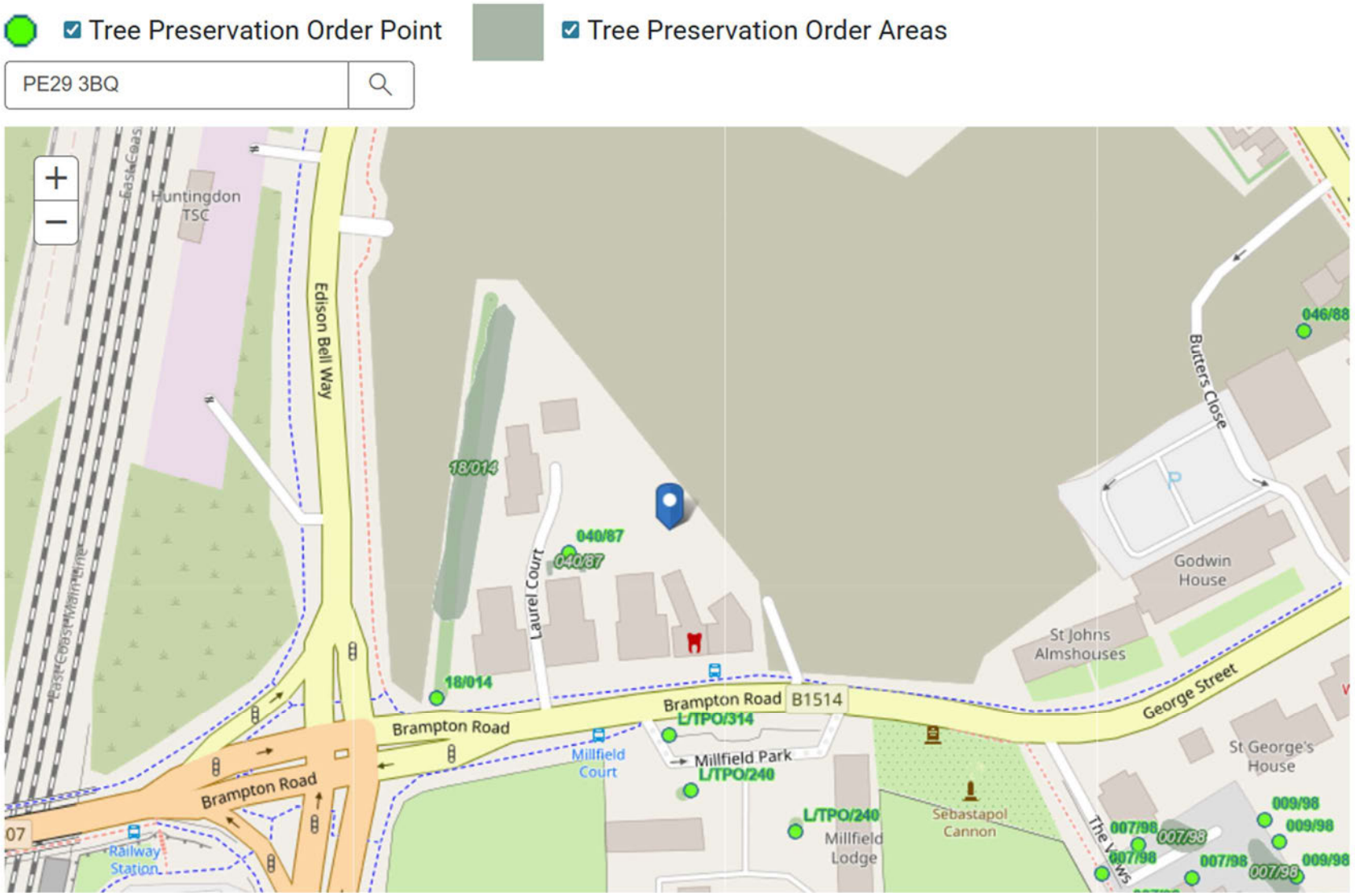

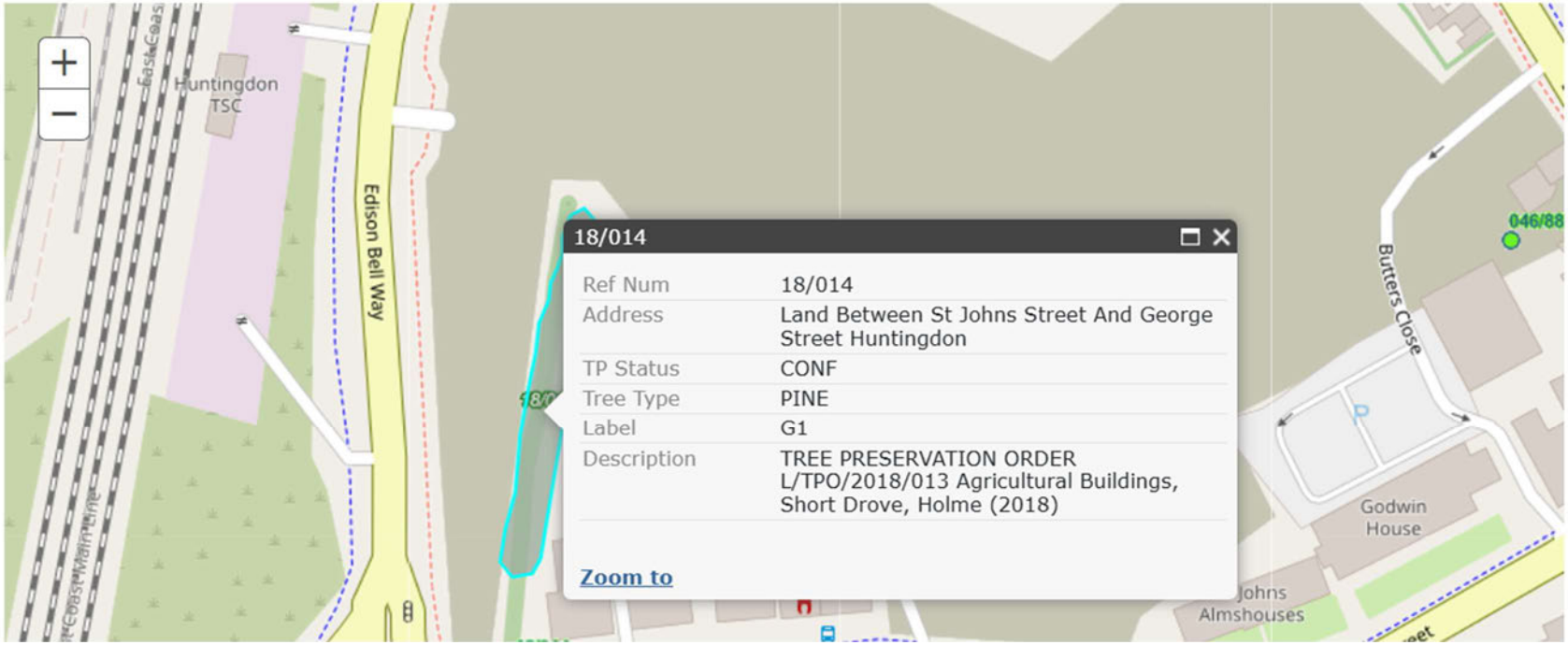
Huntingdon TSC
Edison Bell Way
Butters Close
Godwin House
Johns Almshouses
046/88
18/014
Ref Num 18/014
Address Land Between St Johns Street And George Street Huntingdon
TP Status CONF
Tree Type PINE
Label G1
Description TREE PRESERVATION ORDER L/TPO/2018/013 Agricultural Buildings, Short Drove, Holme (2018)
Zoom to

Tree Preservation Order Point Tree Preservation Order Areas

PE29 3BQ

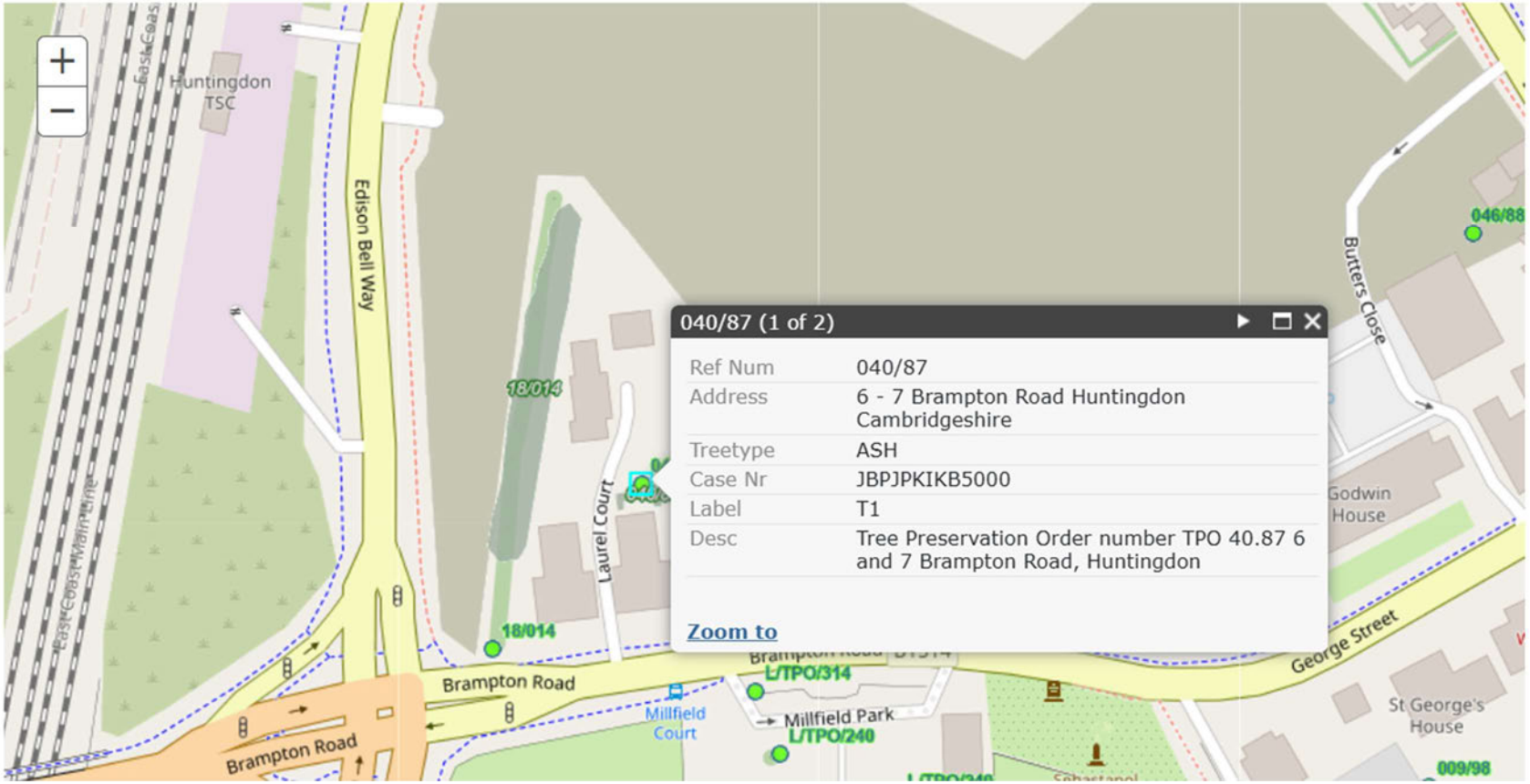

Tree Preservation Order Point Tree Preservation Order Areas

PE29 3BQ

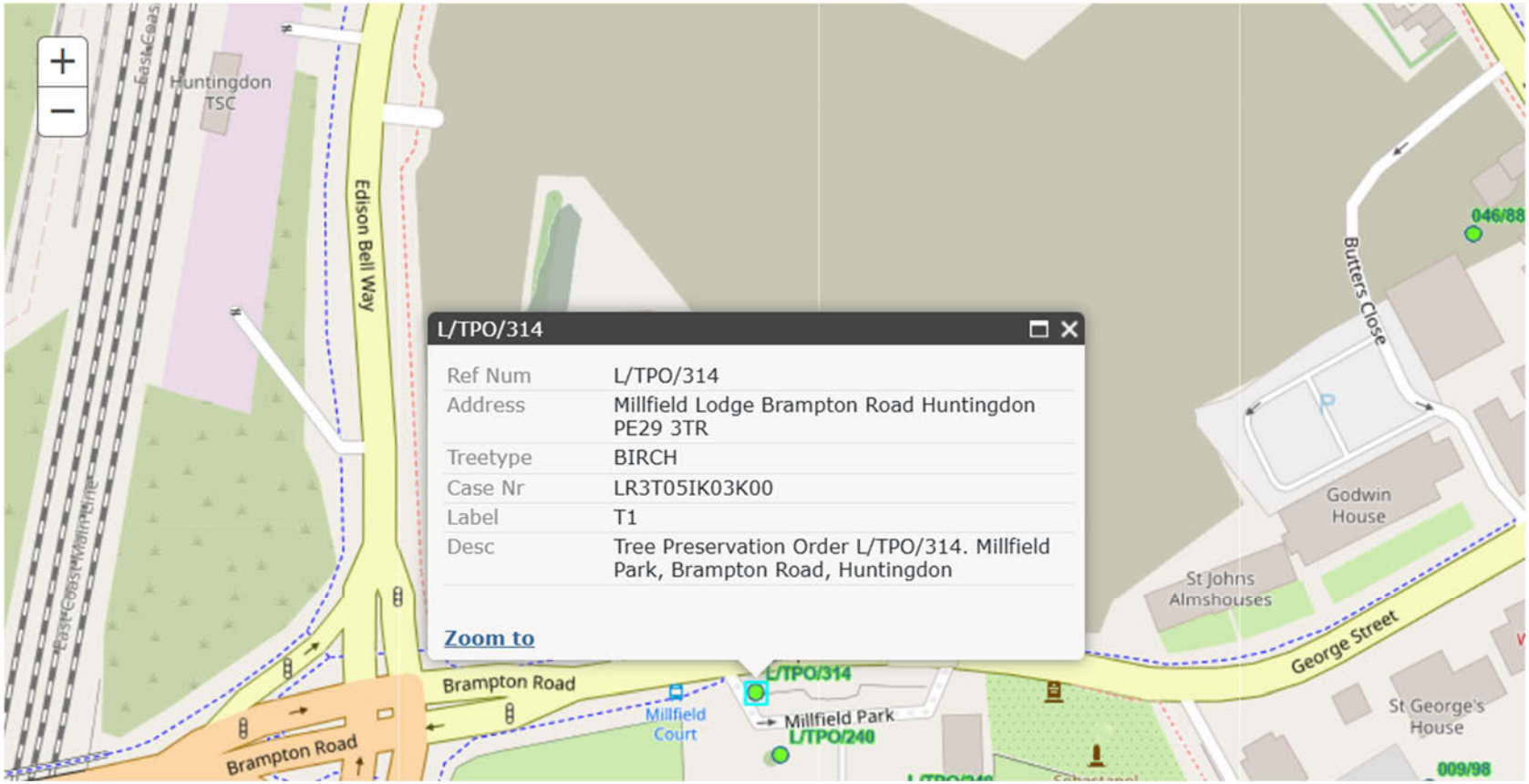

Conservation Area Listed Buildings

PE29 3BQ, Huntingdon, England

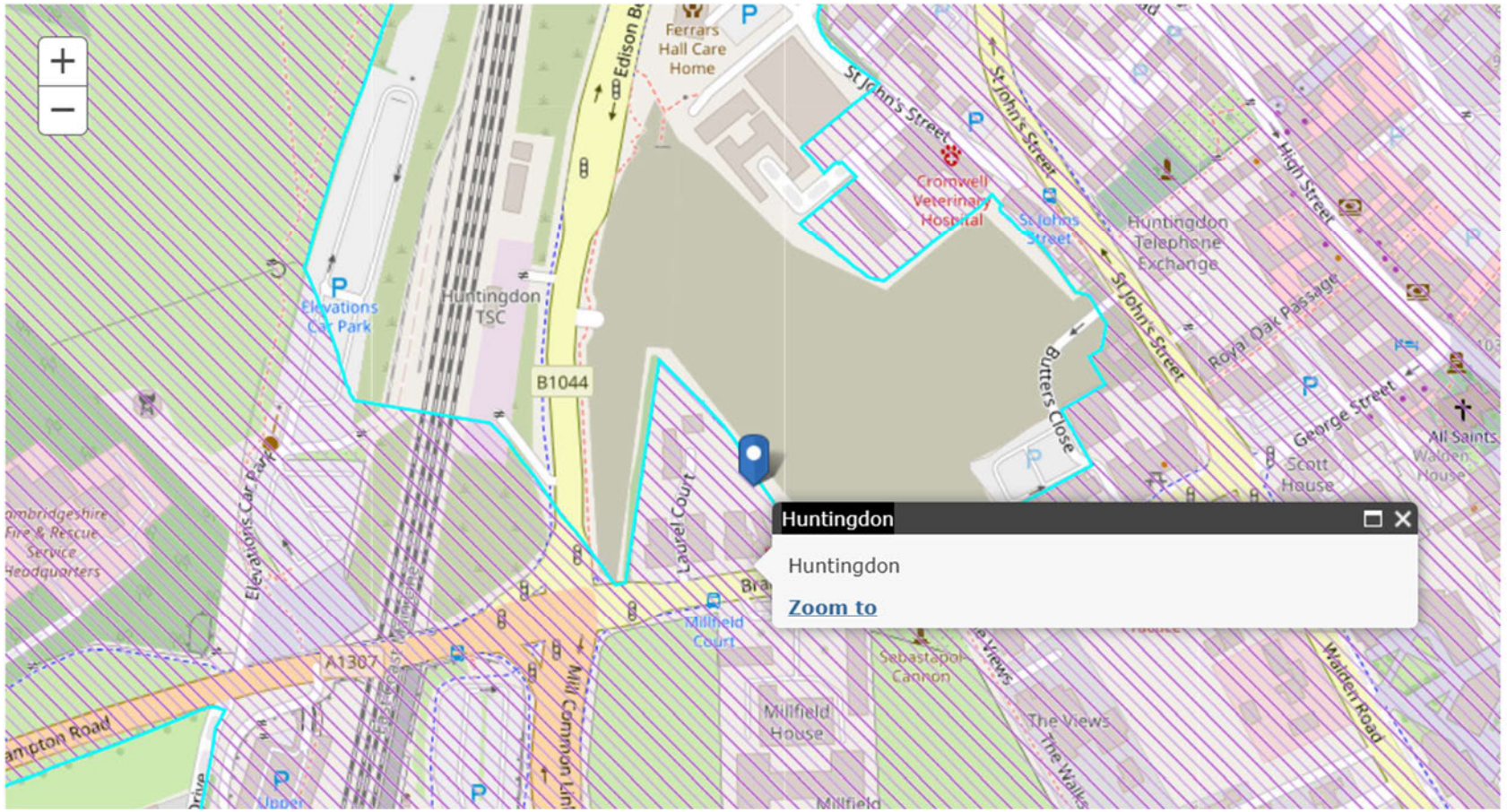

Appendix C

Schedule of Trees

SCHEDULE OF TREES (AIA)

Land at George Street, Station Quarter, Huntingdon, Cambridgeshire

Surveyed By: Matthew Plane-Da'Silva Date: 07/11/2025
Managed By: Matthew Plane-Da'Silva

TreeNo	Species	DBH	Height		Visual	Crown Spread	Problems / Comments	BS Cat	Work Required (TS)	Priority (TS)	Work Required (AIA)	Priority (AIA)
		Min Dist	Crown Base	Lowest Branch	Age	Water Demand						
On site		RPA (m²)	Aspect	Aspect	SULE	Ground Cover						
A001	Pine Spp, Ash, Cherry Spp	440	15		High	N4, E4, S4, W4	Linear feature of Scot Pines with smaller diameter trees located underneath. Overall the feature appears to be in a fair condition overall however unable to fully access the main stems and the trees are heavily colonised by Ivy therefore dimensions have been estimated.	B2	No work required.	4	Undertake linear root pruning.	0
		5.28	2		SM	Moderate						
Yes		87.6			20+ years	Dense undergrowth						
T001	Ash	560	8.5		Low	N5, E5, S5, W5	The tree is heavily colonised by Ivy therefore a full detailed inspection was not possible to be undertaken therefore dimensions have been estimated. The tree is displaying a large amount of healthy budding material.	B1	Sever Ivy to facilitate a future inspection unhindered.	3	Fell for development purposes. Installation of wall and proposed footpath.	0
		6.72	2		SM	Moderate						
Yes		141.9			20+ years	Light undergrowth						
T002	Beech	400	12		Moderate	N4, E4, S4, W4	Unable to access the tree due to material storage and density of undergrowth. The tree is heavily colonised by Ivy therefore dimensions have been estimated. Overall the tree appears to be in a good physiological condition.	B1	Sever Ivy to facilitate a future inspection unhindered.	3	Undertake air spading within the RPA for the excavation required for installation of EV charging ducts. Crown raise to 2m to allow clearance for installation works.	0
		4.8	1.5		SM	Moderate						
Yes		72.4			20+ years	Dense undergrowth						
T003	Hawthorn	240	5		Moderate	N2.5, E2.5, S2.5, W2.5	The tree is heavily clad in Ivy therefore dimensions have been estimated. Low value tree.	C1	No work required.	4		
		2.88	1		SM	High						
Yes		26.1			20+ years	Light undergrowth						

Appendix D

Schedule of Works – Irrespective of Development

SCHEDULE OF WORK IRRESPECTIVE OF DEVELOPMENT

Land at George Street, Station Quarter, Huntingdon, Cambridgeshire

Surveyed By: Matthew Plane-Da'Silva
Surveyed: 07/11/2025
Managed By: Matthew Plane-Da'Silva

Tree No.	Species	Work required	Priority
T001	Ash	Sever Ivy to facilitate a future inspection unhindered.	**3**
T002	Beech	Sever Ivy to facilitate a future inspection unhindered.	**3**

Appendix E

Preliminary Schedule of Works to Allow Development

SCHEDULE OF WORKS (AIA)

Land at George Street, Station Quarter, Huntingdon, Cambridgeshire

Surveyed By: Matthew Plane-Da'Silva
Surveyed: 07/11/2025
Managed By: Matthew Plane-Da'Silva

Tree No.	Species	Work required	Priority
A001	Pine Spp, Ash, Cherry Spp	Undertake linear root pruning.	**0**
T001	Ash	Fell for development purposes. Installation of wall and proposed footpath.	**0**
T002	Beech	Undertake air spading within the RPA for the excavation required for installation of EV charging ducts. Crown raise to 2m to allow clearance for installation works.	**0**

Appendix F

Explanatory Notes

Explanatory Notes

Categories

No	Identifies the tree on the drawing.
Species	Common names are given to aid understanding for the wider audience.
BS 5837 Main Category	Using this assessment (BWS 5837:2012, table 1), trees can be divided into one of the following simplified categories, and are differentiated by cross-hatching and by colour on the attached drawing. **Category A** - Those of high quality with an estimated remaining life expectancy of at least 40 years; **Category B** - Those of moderate quality with an estimated life expectancy of at least 40 years; **Category C** - Those of low quality with an estimated remaining of at least 10 years, or young trees with a stem diameter below 150 mm; **Category U** - Those trees in such condition that they cannot realistically be retained as living trees in the context of the current land use for longer than 10 years.
BS 5837 Sub Category	Table 1 of BS 5837:2012 also requires a sub category to be applied to the A, B, C, and U assessments. This allows for a further understanding of the determining classification as follows: **Sub Category 1** - Mainly arboricultural qualities; **Sub Category 2** - Mainly landscape qualities; **Sub Category 3** - Mainly cultural values, including conservation. Please note that a specimen or landscape feature may fulfil the requirements of more than one Sub Category.
DBH (mm)	Diameter of main stem in millimetres at 1.5 metres from ground level. Where the tree is a multi-stem, the diameter is calculated in accordance with item 4.6.1 of BS 5837:2012.
Height	Recorded in metres, measured from the base of the tree.
Crown Base	Recorded in metres, the distance from ground and aspect of the lowest branch material.
Lowest Branch	Recorded in metres, the distance from ground and aspect of the emergence point of the lowest significant branch.

Age	Recorded as one of seven categories: **Y** Young. Recently planted or establishing tree that could be transplanted without specialist equipment, i.e. less than 150 mm DBH. **S/M** Semi-mature. An established tree, but one which has not reached its prospective ultimate height. **E/M** Early-mature. A tree that is reaching its ultimate potential height, whose growth rate is slowing down but if healthy, will still increase in stem diameter and crown spread. **M** Mature. A mature specimen with limited potential for any significant increase in size, even if healthy. **O/M** Over-mature. A senescent or moribund specimen with a limited safe useful life expectancy. Possibly also containing sufficient structural defects with attendant safety and/or duty of care implications. **V** Veteran. A tree considered a 'survivor' having endured injury, disease and/or decay, developing important habitat features such as decay, trunk hollowing, deadwood, fungal fruiting bodies (plus others) not solely as a consequence of time. Veteran trees are afforded additional protection within the planning system where they may be influenced by change. **A** Ancient. A tree that has the features of a Veteran tree but has also surpassed the typical lifespan for its species. These trees may differ in appearance from a Veteran tree, such as having a thick/wide trunk and a small crown. Ancient trees are usually considered to have exceptional cultural significance. Ancient trees are afforded additional protection within the planning system where they may be influenced by change.
Safe Useful Life Expectancy (SULE)	Relates to the prospective life expectancy of the tree and is given as 4 categories: 1 = 40 years+; 2 = 20 years+; 3 = 10 years+; 4 = less than 10 years.
Crown Spread	Indicates the radius of the crown from the base of the tree in each of the northern, eastern, southern and western aspects.
Minimum Distance	This is a distance equal to 12 times the diameter of the tree measured at 1.5 metres above ground level for single stemmed trees and 12 times the average diameter of the tree measured at 1.5 metres above ground level tree for multi stemmed specimens. (BS 5837:2012, section 4.6).
RPA	This is the Root Protection Area, measured in square metres and defined in BS5837:2012 as "a layout design tool indicating the minimum area around a tree deemed to contain sufficient roots and rooting volume to maintain the tree's viability, and where the protection of the roots and soil structure is treated as a priority". The RPA is shown on the drawing.. Ideally this is an area around the tree that must be kept clear of construction, level changes of construction operations. Some methods of construction can be carried out within the RPA of a retained tree but only if approved by the Local Planning Authority's tree officer.
Water Demand	This gives the water demand of the species of tree when mature, as given in the NHBC Standards Chapter 4.2 "Building Near Trees".

Visual Amenity	Concerns the planning and landscape contribution to the development site made by the tree, hedge or tree group, in terms of its amenity value and prominence on the skyline along with functional criteria such as the screening value, shelter provision and wildlife significance. The usual definitions are as follows: Low — An inconsequential landscape feature. Moderate — Of some note within the immediate vicinity, but not significant in the wider context. High — Item of high visual importance.
Problems/ Comments	May include general comments about growth characteristic, how it is affected by other trees and any previous surgery work; also, specific problems such as deadwood, pests, diseases, broken limbs, etc.
Works Required (TS)	Identifies the necessary tree work to mitigate anticipated problems and deal with existing problems identified in the “Problems/comments” category.
Work Required (AIA)	Identifies the tree work specifically necessary to allow a proposed development to proceed.
Priority	This gives a priority rating to each tree allowing the client to prioritise necessary tree works identified within the Tree Survey. 1 Urgent – works required immediately; 2 Works required within 6 months; 3 Works required within 1 year; 4 Re-inspect in 12 months, 0 Remedial works as part of implementation of planning consent.

BS 5837:2012 Terms and Definitions

Access Facilitation Pruning	One-off tree pruning operation, the nature and effects of which are without significant adverse impact on tree physiology or amenity value, which is directly necessary to provide access for operations on site.
Arboricultural Method Statement	Methodology for the implementation of any aspect of development that is within the root protection area, or has the potential to result in loss of or damage to a tree to be retained.
Arboriculturist	Person who has, through relevant education, training and experience, gained expertise in the field of trees in relation to construction.
Competent Person	Person who has training and experience relevant to the matter being addressed and an understanding of the requirements of the particular task being approached. NOTE - a competent person is expected to be able to advise on the best means by which the recommendations of this British Standard may be implemented.
Construction	Site-based operations with the potential to affect existing trees.
Construction Exclusion Zone	Area based on the root protection area from which access is prohibited for the duration of a project.
Root Protection Area (RPA)	Layout design tool indicating the minimum area around a tree deemed to contain sufficient roots and rooting volume to maintain the tree's viability, and where the protection of the roots and soil structure is treated as a priority.
Service	Any above or below ground structure or apparatus required for utility provision. **NOTE** - examples include drainage, gas supplies, ground source heat pumps, CCTV and satellite communications.
Stem	Principal above ground structural component(s) of a tree that supports its branches.
Structure	Manufactured object, such as a building, carriageway, path, wall, service run, and built or excavated earthwork.
Tree Protection Plan	Scale drawing, informed by descriptive text where necessary, based upon the finalized proposals, showing trees for retention and illustrating the tree and landscape protection measures.

Veteran/Ancient Tree Buffer

A diagrammatic representation of the additional protection measures afforded to Veteran and Ancient Trees by the imposing of a geographical 'buffer' space between the Veteran/Ancient Trees and any potential activity such as construction, that may affect the trees. The buffer zones are calculated as follows:

For ancient woodlands, the proposal should have a buffer zone of at least 15 metres from the boundary of the woodland to avoid root damage (known as the root protection area). Where assessment shows other impacts are likely to extend beyond this distance, the proposal is likely to need a larger buffer zone. For example, the effect of air pollution from development that results in a significant increase in traffic.

For ancient or veteran trees (including those on the woodland boundary), the buffer zone should be at least 15 times larger than the diameter of the tree. The buffer zone should be 5 metres from the edge of the tree's canopy if that area is larger than 15 times the tree's diameter. This will create a minimum root protection area.

Where assessment shows other impacts are likely to extend beyond this distance, the proposal is likely to need a larger buffer zone.

Source: Natural England; The Forestry Commission; The UK Government Dept. for The Environment.

Appendix G

Advisory Information & Sample Specifications

1. BS 5837:2012 Figure 1 - Flow Chart – Design and Construction & Tree Care

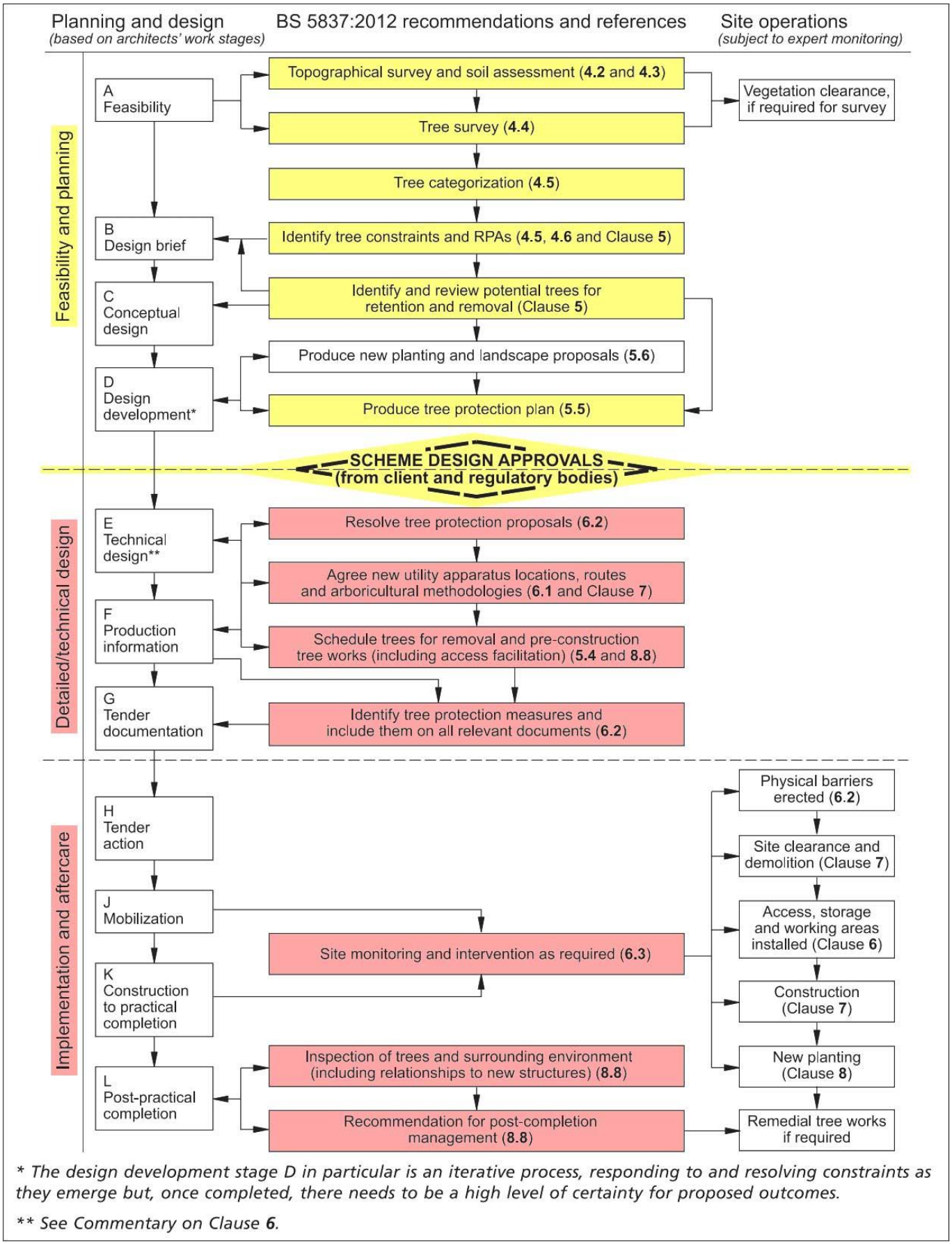

** The design development stage D in particular is an iterative process, responding to and resolving constraints as they emerge but, once completed, there needs to be a high level of certainty for proposed outcomes.*

*** See Commentary on Clause **6**.*

2.

European Protected Species and woodland operations. (V4)

Complete all sections of the Checklist

✔

Checklist

1 **Are you within, or close to, the known mapped range of any of the protected species OTHER THAN BATS which are potentially everywhere? Tick any that apply.**
See distribution maps in the Good Practice Guidance for each species -

- ☐ Dormice
- ☐ Otters
- ☐ Great crested newts
- ☐ Sand lizards
- ☐ Smooth snakes

YES ☐ NO ☐

2 **Does your wood contain any of the following habitats? Tick any that apply.**

- ☐ Old trees with holes and crevices which might be used bats
- ☐ Species rich scrub/coppice, early growth stage plantations and forest interfaces
- ☐ Rivers on which otters might be found
- ☐ Ponds which might be occupied by great crested newts
- ☐ Open areas on heathy soils

YES ☐ NO ☐

3 **Have any of the protected species been recorded in this wood or on adjoining sites? Tick any that apply.**
Indicate which sources of information you have checked:

- ☐ National Biodiversity Network (www.nbn.org.uk)
- ☐ Local Biological Records Centre
- ☐ Local Wildlife Trust
- ☐ Other

Specify Other:

YES ☐ NO ☐

4 **Have your inspections or any expert surveys found any of the following signs or evidence? Tick any that apply.**

- ☐ Signs (e.g. otter spraint, nuts gnawed by dormice, leaves folded by newts)
- ☐ Sightings (or echo-location)
- ☐ Potential breeding or roosting sites (e.g. veteran trees, old trees with crevices, riverside hollow trees, ponds, timber stacks, large fallen deadwood)
- ☐ Confirmed breeding or roosting sites (i.e. evidence of sites actually being used)

Details:

YES ☐ NO ☐

CHECK POINT

If you have answered NO to ALL of the above then only bats need to be considered in your operations.

If you have answered YES to any of the above then the species concerned must be considered as well as bats.

5 **Do the operations comply with Good Practice for bats and any other species found (or likely to be found in your wood) or can the operations be modified to do so?**
Details: Use reverse of form to expand as required:

YES ☐ NO ☐

6 **Whether or not a licence is required...**
Has the information been communicated to operators (including the location of breeding sites and sensitive areas)? Tick any that apply.

- ☐ Included in documentation (e.g. contract, letter of instruction, site assessment or other management plan)
- ☐ Shown to operators and/or their supervisor
- ☐ Marked with paint or hazard tape
- ☐ Shown on the site plan

Other means:

YES ☐ NO ☐

7 **Have arrangements for supervision been made to ensure Good Practice guidance is complied with during the operations?**
Details:

YES ☐ NO ☐

Details

Name of Wood:

Grid Reference:

Area: (ha) .

Date of Assessment:

Name of Assessor:

Notes

A licence is not required but continue to sections 6 and 7 below

You will need to obtain a licence BEFORE carrying out the work (see EPS Licence Application Forms and Notes)

You may commit an offence if you do not tell your operators about the protected species in your wood.

You may commit an offence if you do not take steps to ensure that your operators comply with the Good Practice guidance.

3. BS 5837:2012 Figure 2: Default specification for protective barrier

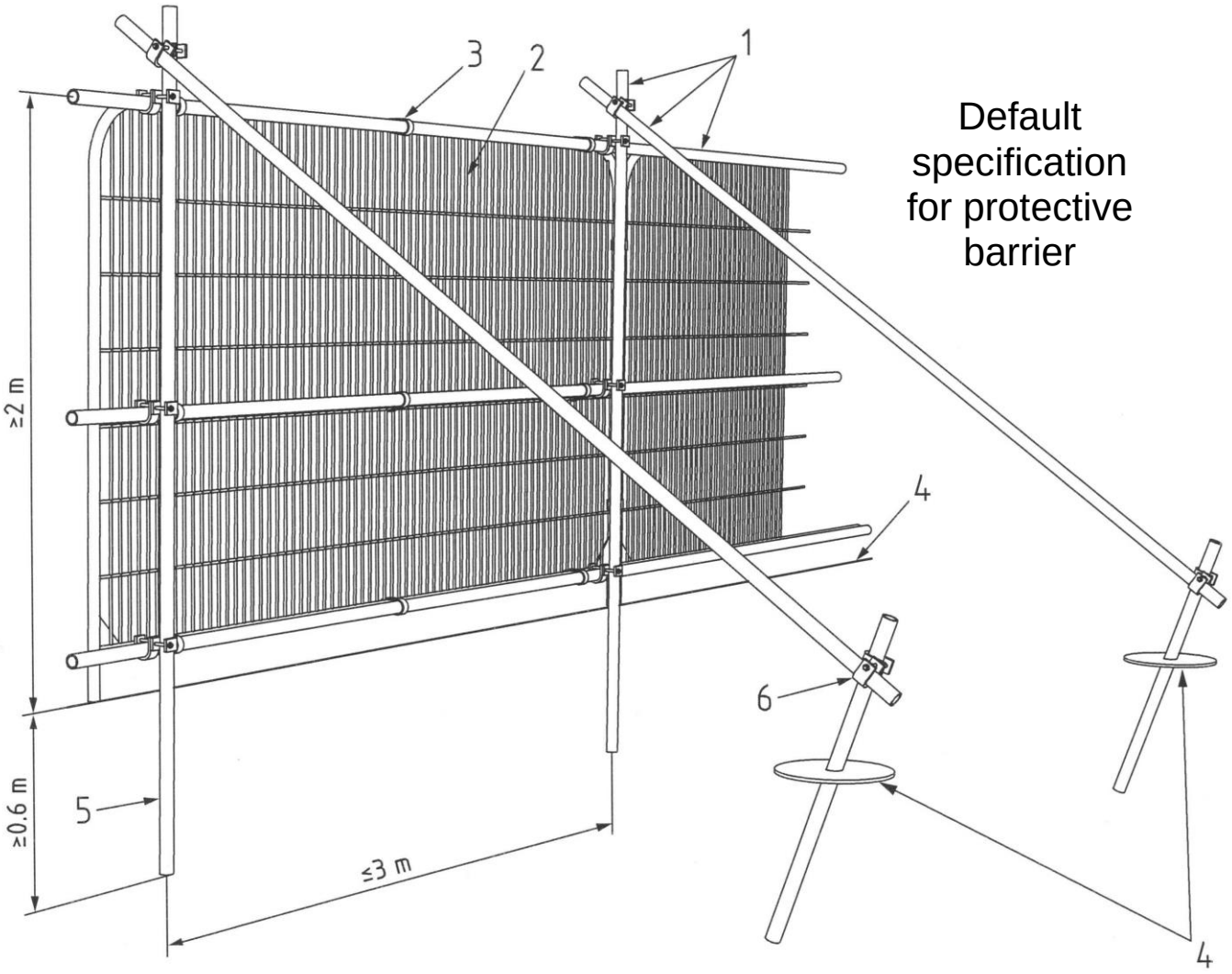

Key

1	Standard scaffold pole
2	Heavy gauge 2m tall galvanised tube and welded mesh infill panels
3	Panels secured to uprights and cross-members with wire ties
4	Ground level
5	Uprights driven into the ground until secure (minimum depth 0.6m
6	Standard scaffold clamps

4. BS 5837:2012 Figure 3: Examples of above-ground stabilizing systems

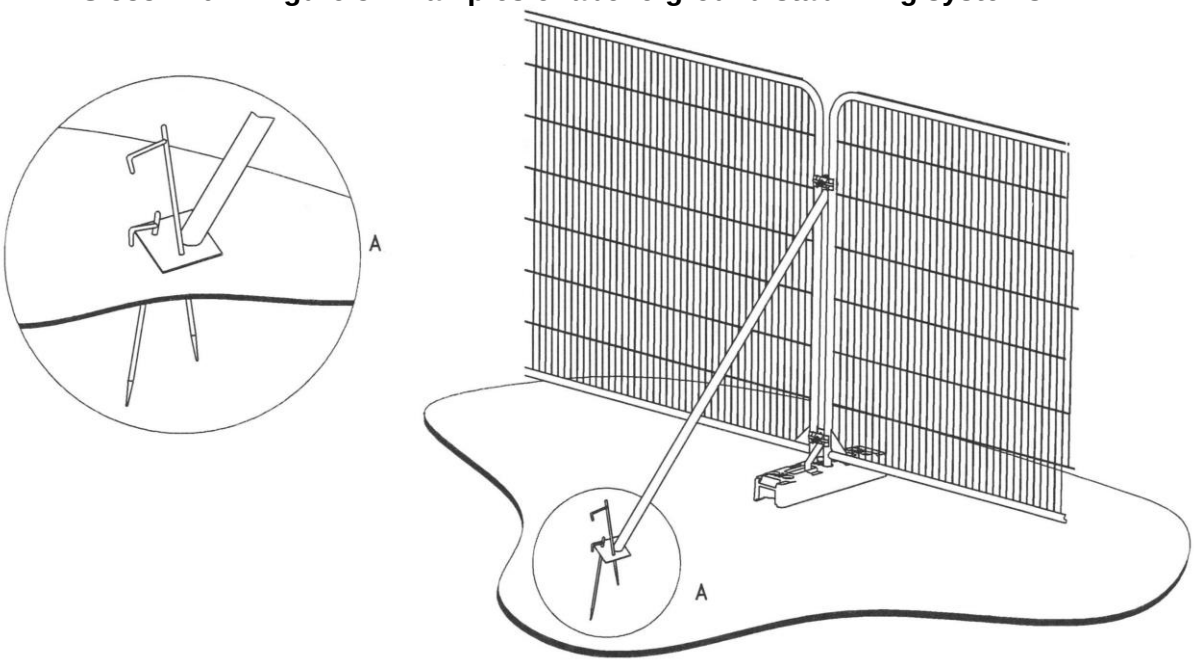

a) Stabilizer strut with base plate secured with ground pins

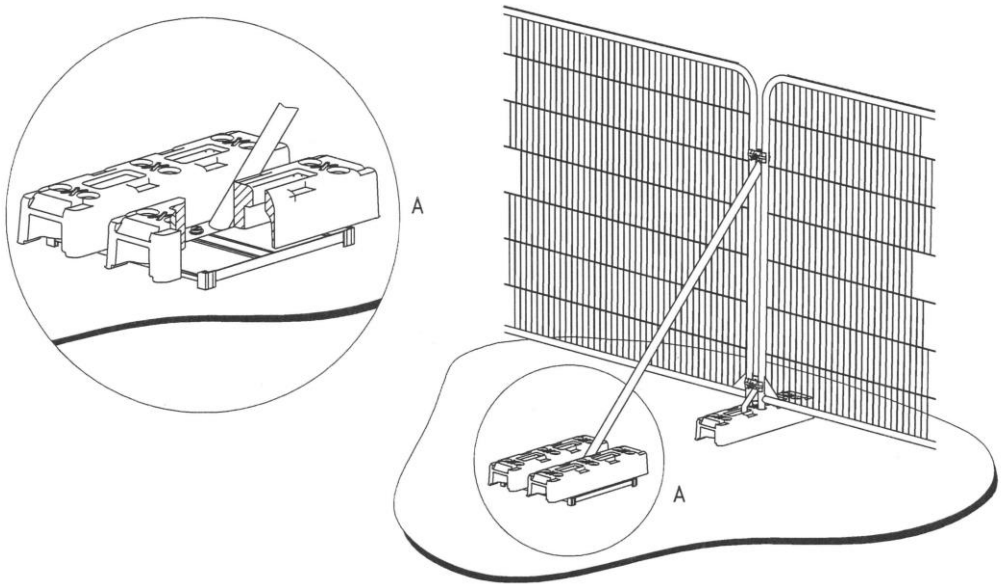

b) Stabilizer strut mounted on block tray

Appendix H

Hayden’s Drawing

- Arboricultural Impact Assessments
- Arboricultural Method Statements
- Tree Constraints Plans
- Arboricultural Feasibility Studies
- Shade Analysis
- Picus Tomography
- Arboricultural Consultancy for Local Planning Authority
- Quantified Tree Risk Assessment
- Health & Safety Audits for Tree Stocks
- Tree Stock Survey and Management
- Mortgage and Insurance Reports
- Subsidence Reports
- Woodland Management Plans
- Project Management
- Ecological Surveys

