Cambridge Trees Ltd

Cambridge: 01954 574696
Huntingdon: 01480 802550
www.cambridge-trees.co.uk
office@cambridge-trees.co.uk

Tree Survey and
Tree Protection Plan to BS5837:2012

Report prepared for:
Nigel Piper
Hemingford Peace Memorial Field
Manor Road
Hemingford Grey
PE28 9BX

Report prepared by:
John Talbot FdSc Arb MArborA
Cambridge Trees Ltd
39 London St
Godmanchester PE29 2HX

December 2024

Contents

1 Introduction 3

2 Site and development details 4

3 Tree Survey 4

4 Tree Protection Plan 8

Appendix A: BS5837:2012 Terms and Definitions 14

Appendix B: Example sign for use with tree protection fencing 16

1.1 Report brief

This report has been commissioned by Nigel Piper of the Peace Memorial Field Management Committee. A children's play park area within the Memorial Field is being renovated, and the work will impact trees close to the play park area.
The requirement is to carry out a survey of all trees on site with regard to proposed development, and to provide a Tree Survey and Tree Constraints Plan to BS5837, in order that the trees and their rooting systems can be protected while the work is carried out.

1.2 Caveats and Limitations

1.2.1 This report is for the sole use of the client. Its reproduction or use by any other persons is forbidden unless express written consent is provided by Cambridge Trees Ltd.
1.2.2 The survey was carried out from ground level – no climbed inspections were undertaken.
1.2.3 This is an arboricultural report and relates only to the trees mentioned; suitable expert advice should be sought on other matters relating to the site, including and not limited to: construction, engineering, soil, ecology and archaeology.
1.2.4 Dimensions and location of trees should be considered estimations for the purposes of this survey.
1.2.5 Whilst tree condition is considered in the methodology used, this report should not be considered an assessment of tree condition or safety. Responsibility for the safety of trees on the site remains with the site owner.
1.2.6 Trees and shrubs are living organisms whose conditions can change rapidly. The findings of this report are therefore valid only for 12 months from the date on the header.
1.2.7 This report is designed to support a planning application. Should the planning process extend beyond 12 months from the date of this report, or changes on the site occur that impact the trees, it is recommended that the tree retention categories are reviewed prior to work commencing.

1.3 Documents

1.3.1 BS5837:2012 'Trees in relation to design, demolition and construction – Recommendations' is the nationally recognised standard typically used by Local Planning Authorities (LPAs) to assess planning applications. It is frequently referred to in planning conditions to enforce protection or control of works that may be harmful to trees both on and off the site.

1.3.2 Each tree is allocated a category (A, B, C, U) according to it's quality and (non-fiscal) value, which provides a guide as to it's suitability for retention within the proposed development. Categorisation is defined using a cascade chart, included for reference in Section 3 of this report.

1.4 Qualifications

The author of this report is John Talbot; I am the Director of Cambridge Trees Ltd. I have worked in arboriculture for 14 years as a climbing arborist, tree surveyor and consulting arboriculturist.
I have a Foundation Degree in Arboriculture and am a Professional Member of the Arboricultural Association

2 Site and development details

2.1 The Playing Field is located within the village of Hemingford Grey, with the children's play area situated on the northern boundary. Some of the trees that may be affected by the proposed renovation work belong to a neighbouring property.

2.2 The Huntingdonshire District Council website was checked on Monday 2nd December 2024 – this shows that the site and neighbouring property are within a Conservation Area – any work to trees must be pre-approved by the Local Authority

2.3 Work to be carried out on site includes removal of existing play equipment and installation of new play equipment with a rubber compound floor beneath. This will involve removal of the top 150mm of soil to allow installation of the rubber compound floor, and excavation in specific areas up to a depth of 1.2m to remove and install play equipment

3 Tree Survey

3.1 Methodology

3.1.1 The survey was carried out on Tuesday 3rd December 2024. Weather conditions were fine and clear.

3.1.2 All observations have been made from ground level; no climbed inspections or detailed investigations have been carried out.

3.1.3 BS5837:2012 recommends that a tree survey is carried out during the initial planning stage of a development, and that the findings of the survey are used to ensure retention of better quality (Category A and B) trees where possible.
Where these better quality trees cannot be reasonably retained, replacement planting can be carried out to mitigate their loss.

3.2 Key to Tree Survey and Plans

3.2.1 Life Stage:

Y	Young
EM	Early Mature
MA	Middle Aged
M	Mature
OM	Over Mature
V	Veteran

3.2.2 DBH

'Diameter at Breast Height' – the stem diameter measured in millimetres at 1.5m above ground level. Where the ground around the base of the tree is not level this is taken 1.5m above the upper side of the slope.

3.2.3 Crown Spread

The spread of the crown in metres, shown to the nearest half metre to the four cardinal points of the compass

3.2.4 ERC

Estimated Remaining Contribution: the amount of time a tree is likely to be retained for, recorded in a range of years

<10	Unsuitable for retention
10-20	Suitable for retention in the short term
20 – 40	Will continue to offer benefits for the foreseeable future
40+	Good longevity potential

3.2.5 BS Category

The category assigned to each tree according to BS5837:2012; full details in the cascade chart below:

BS5837 Cascade Chart for Tree Quality Assessment

Category and definition	Criteria (including subcategories where appropriate)		
Trees unsuitable for retention (see Note)			
Category U Those in such a condition that they cannot realistically be retained as living trees in the context of the current land use for longer than 10 years	• Trees that have a serious, irremediable, structural defect, such that their early loss is expected due to collapse, including those that will become unviable after removal of other category U trees (e.g. where, for whatever reason, the loss of companion shelter cannot be mitigated by pruning) • Trees that are dead or are showing signs of significant, immediate, and irreversible overall decline • Trees infected with pathogens of significance to the health and/or safety of other trees nearby, or very low quality trees suppressing adjacent trees of better quality NOTE Category U trees can have existing or potential conservation value which it might be desirable to preserve; see 4.5.7.		
	1 Mainly arboricultural qualities	2 Mainly landscape qualities	3 Mainly cultural values, including conservation
Trees to be considered for retention			
Category A Trees of high quality with an estimated remaining life expectancy of at least 40 years	Trees that are particularly good examples of their species, especially if rare or unusual; or those that are essential components of groups or formal or semi-formal arboricultural features (e.g. the dominant and/or principal trees within an avenue)	Trees, groups or woodlands of particular visual importance as arboricultural and/or landscape features	Trees, groups or woodlands of significant conservation, historical, commemorative or other value (e.g. veteran trees or wood-pasture)
Category B Trees of moderate quality with an estimated remaining life expectancy of at least 20 years	Trees that might be included in category A, but are downgraded because of impaired condition (e.g. presence of significant though remediable defects, including unsympathetic past management and storm damage), such that they are unlikely to be suitable for retention for beyond 40 years; or trees lacking the special quality necessary to merit the category A designation	Trees present in numbers, usually growing as groups or woodlands, such that they attract a higher collective rating than they might as individuals; or trees occurring as collectives but situated so as to make little visual contribution to the wider locality	Trees with material conservation or other cultural value
Category C Trees of low quality with an estimated remaining life expectancy of at least 10 years, or young trees with a stem diameter below 150 mm	Unremarkable trees of very limited merit or such impaired condition that they do not qualify in higher categories	Trees present in groups or woodlands, but without this conferring on them significantly greater collective landscape value; and/or trees offering low or only temporary/transient landscape benefits	Trees with no material conservation or other cultural value

3.3 Observations and Analysis

BS 5837:2012 Tree Survey

Site: Hemingford Peace Memorial Field

Date: 3rd December 2024

No.	Tree Species	Latin Name	Life Stage	DBH (mm)	Crown Spread				Height (m)	ERC (<10, 10+, 20+, 40+)	BS Category	Comments and recommendation
					N	S	E	W				
1	Oak	*Quercus robur*	SM	350	4.5	4.5	4.5	4.5	6	40	B	Good open grown, semi-mature tree
2	Oak	*Quercus robur.*	Y	200	0	6	3	2	7	40	C	Smaller tree with good potential
3	Hazel	*Corylus avellana*	M	200	3	2	2.5	2	3	20	B	Mature specimen, adds value as part of the group
4	Holly	*Ilex aquifolium*	M	250	3	3	3	3	6	40	B	Mature specimen, adds value as part of the group
5	Robinia	*Robinia pseudoacacia*	Y	250	1	4	4	4	5	20	C	Smaller tree with good potential
6	Hazel	*Corylus avellana*	SM	100	1	2	2	2.5	12	40	C	Good specimen, adds value as part of the group
7	Robinia	*Robinia pseudoacacia*	Y	100	1	2	2	2	12	40	C	Minor tree, unlikely to develop into good specimen due to proximity to other trees
8	Ash	*Fraxinus excelsior*	M	450	5	5	4	6	8	40	B	Mature tree providing good amenity value
9	Holly	*Ilex aquifolium*	M	250	2	3	2	2	7	40	C	Mature specimen, adds value as part of the group
10	Ash	*Fraxinus excelsior*	M	700	12	13	10	10	10	40	A	Large mature tree providing good amenity value

Purpose and Communication

4.1 Trees may be adversely affected by building works in a number of ways. These include damage by chemicals or other substances such as cement and concrete, soil compaction through the use of heavy machinery, damage to roots from excavation and direct stem and branch damage by machines such as excavators.

4.2 The purpose of the Tree Protection Plan is to provide detail of the specific measures that must be implemented on site to ensure the protection of trees that could be adversely affected by building works.

4.3 In order for the TPP to be effectively implemented, it must be distributed to all parties involved in the planning and construction process.

4.4 The person with overall responsibility for the site shall ensure that:

- All relevant staff are aware of and have been provided with this document
- The requirements of this Tree Protection Plan have been met before the commencement of work on site
- Staff are made aware of any changes to the document as work progresses
- Tree protection measures remain in place for the duration of work on site

4.5 Tree Protection Plan Site Layout

Figure 1 below (also provided as Appendix C separately to this document) shows the location of surveyed trees. The red lines on the plan show the location of tree protection fencing which must be installed prior to work commencing on site and must remain on site for the duration of works.

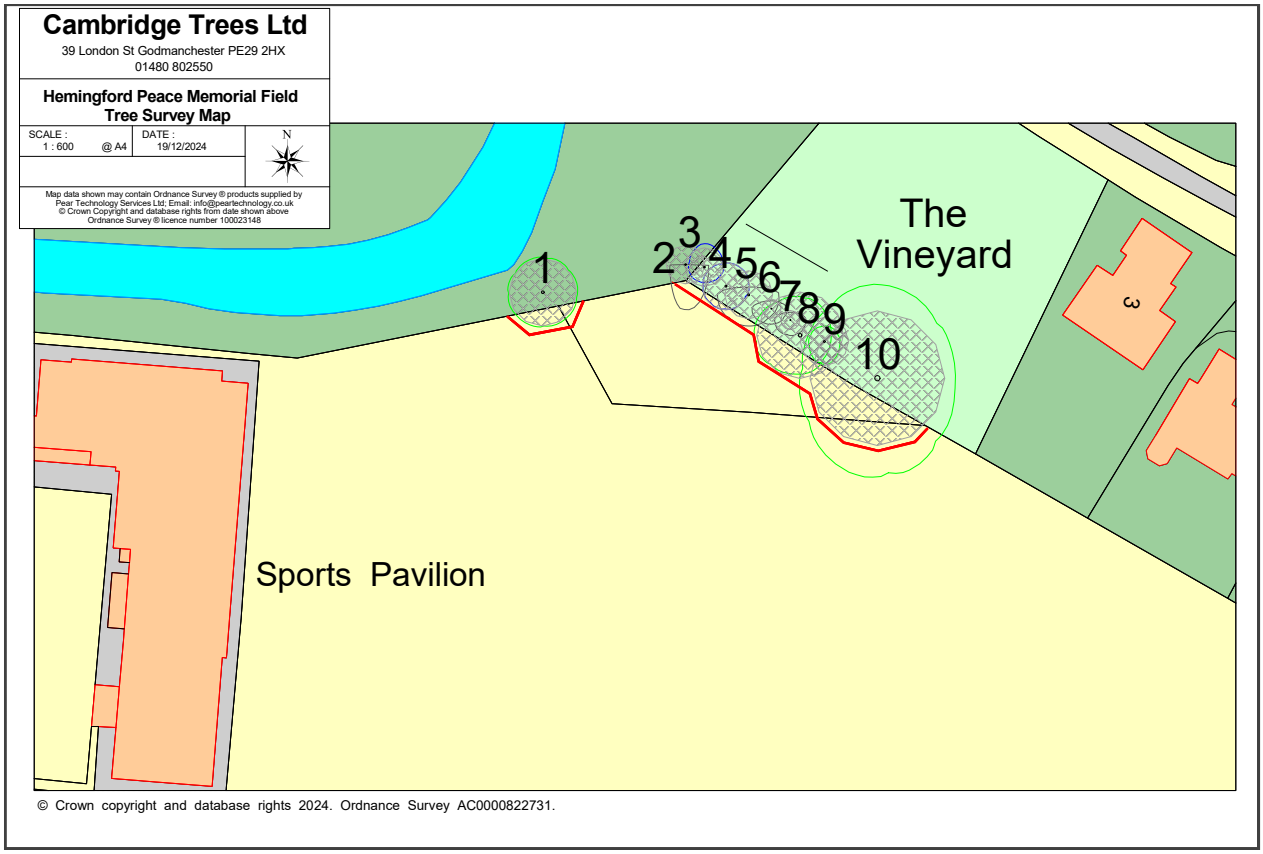

Figure 1: Site tree plan with Tree protection fencing

4.6 Root Protection Area

This is the area that should be protected during excavation or construction in order to retain sufficient roots for water and nutrient uptake and ensure tree stability.
The Root Protection Area should be protected by a protective barrier (see section 4.9) installed prior to any construction activity – the barrier should be installed at the edge of the Root Protection Area and is marked by the red line on the map in section 4.5; for example, for T1, the RPA barrier should be installed no less than 4.2m away from the trunk of T1.
The work can be carried out without disturbing the RPAs of all trees apart from T8 Ash.

Tree Number	Tree Name (species)	Stem Diameter (mm)	Root Protection Area (Radius, m)
1	Oak	350	4.20
2	Oak	200	2.40
3	Hazel	224	2.68
4	Holly	250	3.00
5	Robinia	250	3.00
6	Hazel	224	2.68
7	Robinia	100	1.20
8	Ash	450	4.00
9	Holly	250	3.00
10	Ash	700	8.40

T8 Ash: the calculated RPA diameter for this tree is 5.4m, however a piece of play equipment (see Item 1 marked on diagram below) will need to be installed within the RPA, therefore the RPA diameter on the play park side of the tree has been reduced to 4 metres.
Incursion into the RPA will involve removal of the top 150mm of soil to install the rubber compound floor, and three 200mm diameter holes to 1.2m depth for the poles to support the play equipment.
This will result in a maximum 10% loss of RPA which will have minimal impact on the tree.

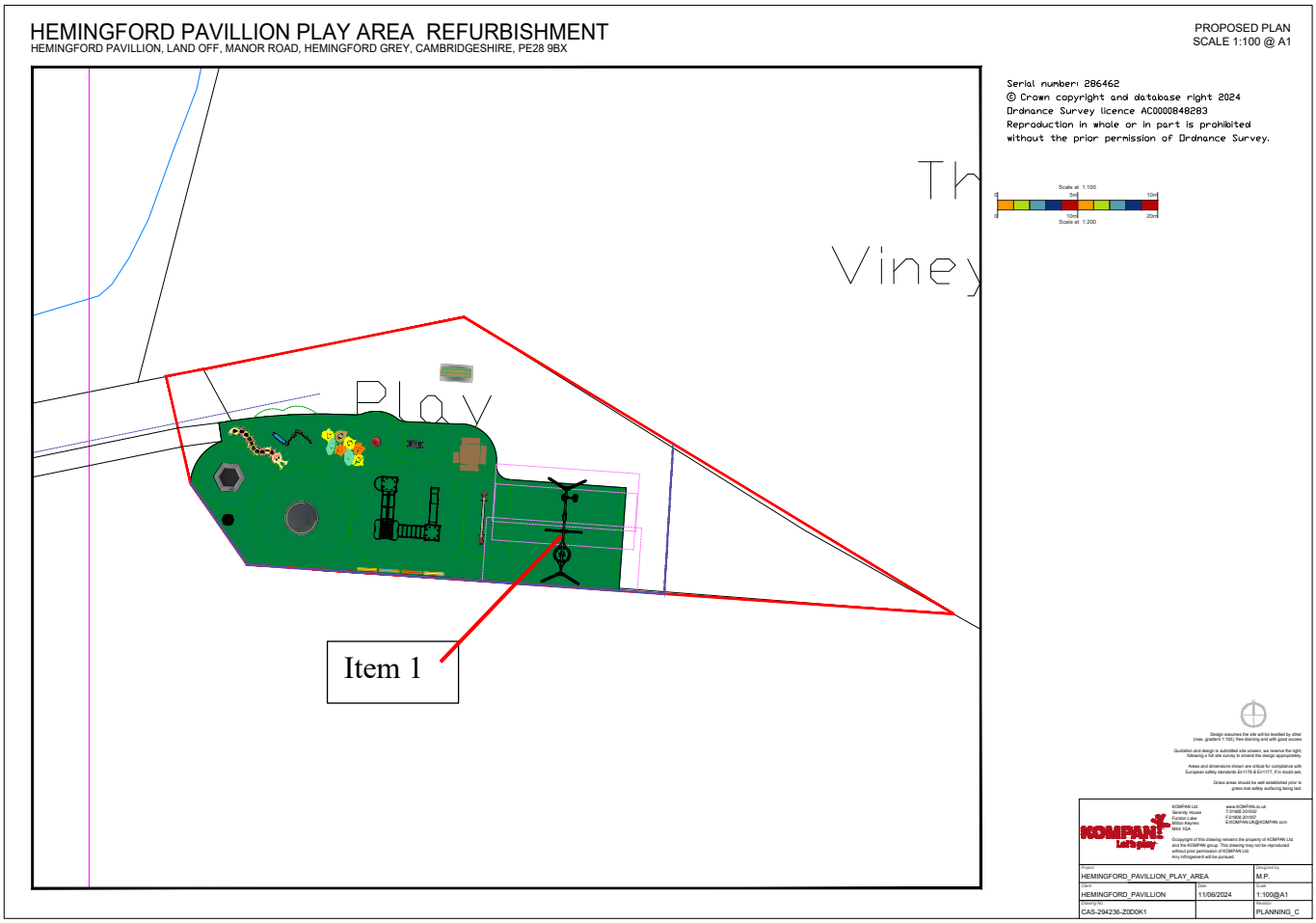

Figure 2: site plan with play equipment

4.7 Prohibited activities

The following activities must not take place under any circumstances:

- Cutting, felling, uprooting, damaging or destroying any retained tree
- Use or storage of any chemicals or substances that may be harmful to trees within, or upslope of the RPA, including mixing cement and positioning of site toilets
- Use or storage of any heavy items such as storage containers and mechanical excavators within the RPA
- Operation of any plant with a hydraulic arm within striking distance of any retained tree
- Lighting a fire within 10 metres of the canopy of any retained tree
- Alteration of movement of approved tree protection measures without prior written approval from the Local Authority

4.8 Incident Management

If the tree protection measures are breached for any reason, the following procedures should be followed:

- The site manager should be informed immediately
- The Local Authority should be contacted and their advice sought
- Action should be taken immediately to stop the breach and prevent future occurrences
- The damage caused shall be assessed and appropriate mitigation measures implemented

4.9 Protective Barriers – Root Protection Area Fencing

BS5837:2012 specifies the type of protective barrier to be used in Tree Protection. Section 6.2.2 reads as follows:

'The default specification should consist of a vertical and horizontal scaffold framework, well braced to resist impacts, as illustrated in Figure 1. The vertical tubes should be spaced at a maximum interval of 3 m and driven securely into the ground. Onto this framework, welded mesh panels (Heras or similar) should be securely fixed. Care should be exercised when locating the vertical poles to avoid underground services and, in the case of the bracing poles, also to avoid contact with structural roots.'

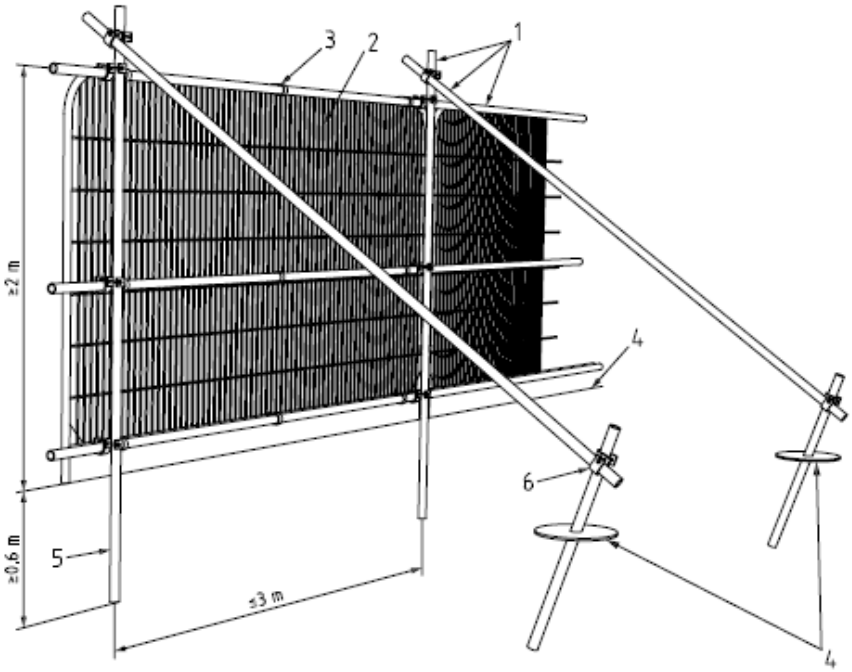

Key

1 Standard scaffold poles
2 Heavy gauge 2 m tall galvanized tube and welded mesh infill panels
3 Panels secured to uprights and cross-members with wire ties
4 Ground level
5 Uprights driven into the ground until secure (minimum depth 0.6 m)
6 Standard scaffold clamps

Figure 3: Default specification for protective barrier

4.10 BS5837:2012 also allows for alternative methods of barrier installation where underground services or hard ground level surfacing prohibit installation of supporting poles into the ground. Figure 3 below details this method of barrier installation

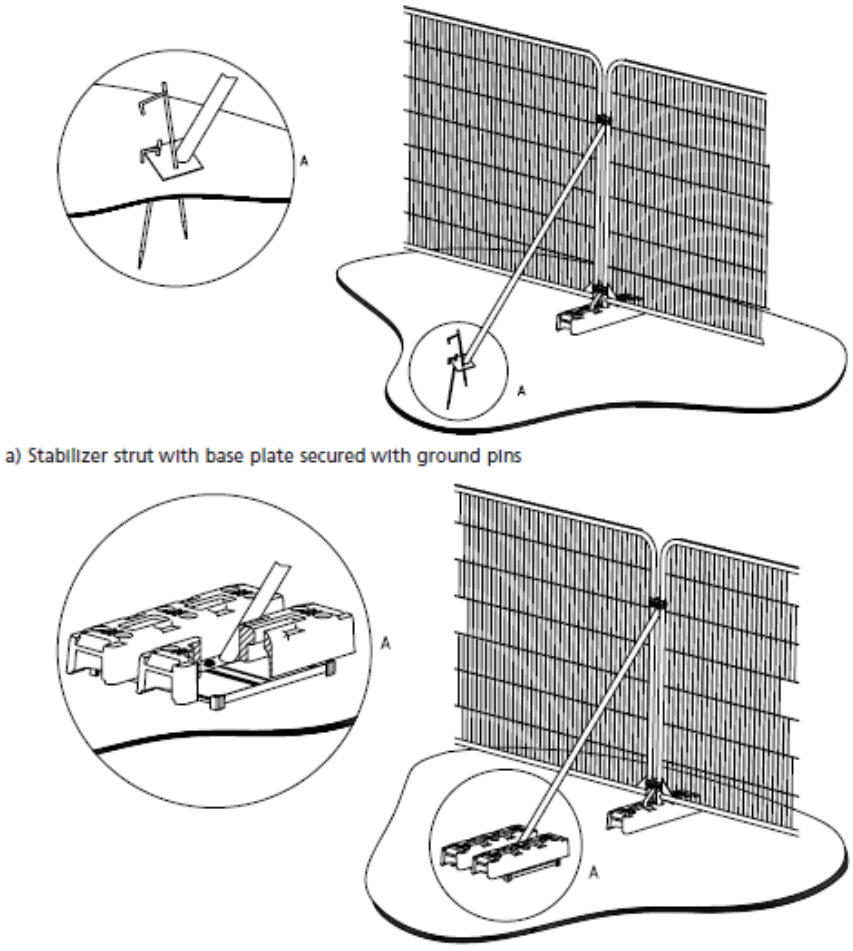

Figure 4: Examples of above-ground stabilizing systems

4.11 Installation of protective fencing

Figure 1 (Section 4.5) shows where the protective fencing should be installed on site and the RPAs that it is designed to protect.

4.12 Signage

All-weather notices such as that provided in Appendix B should be affixed securely to the fencing to alert site workers to the presence and purpose of the fencing.

Appendix A: BS5837:2012 Terms and Definitions

For the purposes of this British Standard, the following terms and definitions apply.

2.1. access facilitation pruning
one-off tree pruning operation, the nature and effects of which are without significant adverse impact on tree physiology or amenity value, which is directly necessary to provide access for operations on site

2.2. arboricultural method statement
methodology for the implementation of any aspect of development that is within the root protection area, or has the potential to result in loss of or damage to a tree to be retained

2.3. arboriculturist
person who has, through relevant education, training and experience, gained expertise in the field of trees in relation to construction

2.4. competent person
person who has training and experience relevant to the matter being addressed and an understanding of the requirements of the particular task being approached
NOTE A competent person is expected to be able to advise on the best means by which the recommendations of this British Standard may be implemented.

2.5. conservation area
an area of special architectural interest, the character or appearance of which it is desirable to preserve or enhance

2.6. construction
site-based operations with the potential to affect existing trees

2.7. construction exclusion zone
area based on the root protection area (**3.7**) from which access is prohibited for the duration of a project

2.8. root protection area (RPA)
layout design tool indicating the minimum area around a tree deemed to contain sufficient roots and rooting volume to maintain the tree's viability, and where the protection of the roots and soil structure is treated as a priority

2.9. service
any above- or below-ground structure or apparatus required for utility provision
NOTE Examples include drainage, gas supplies, ground source heat pumps, CCTV and satellite communications.

2.10. stem
principal above-ground structural component(s) of a tree that supports its branches

2.11. structure
manufactured object, such as a building, carriageway, path, wall, service run, and built or excavated earthwork

2.12. tree protection plan

scale drawing, informed by descriptive text where necessary, based upon the finalized proposals, showing trees for retention and illustrating the tree and landscape protection measures

2.13. tree preservation order

a written order made by a local planning authority (e.g. a borough, district or unitary council or a national park authority) which, in general, makes it an offence to cut down, top, lop, uproot, wilfully damage or wilfully destroy a tree protected by that order without the authority's permission.

2.14. veteran tree

tree that, by recognized criteria, shows features of biological, cultural or aesthetic value that are characteristic of, but not exclusive to, individuals surviving beyond the typical age range for the species concerned
NOTE These characteristics might typically include a large girth, signs of crown retrenchment and hollowing of the stem. [BS 3998:2010]

TREE PROTECTION



BARRIER

Construction Exclusion Zone: