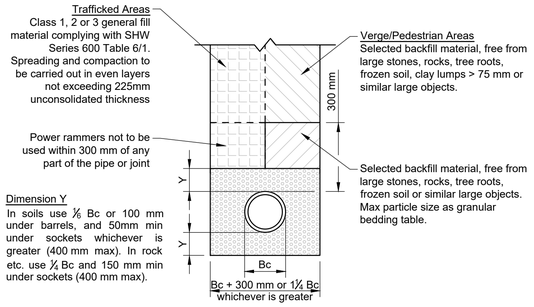

PROCESSED AND AS-DUG GRANULAR BEDDING FOR PIPES		
Pipe nominal size (mm)	Nominal maximum particle size (mm)	Suitable Materials
100	10	10 mm nominal single size
Over 100 to 150	16	10 or 14mm nominal single-size or 14mm to 5mm graded
Over 150 to 300	20	10, 14 or 20mm nominal single-size or 14mm to 5mm graded or 20mm to 5mm graded
Over 300 to 550	20	14 or 20mm nominal single-size or 14 to 5mm graded or 20 to 5mm graded
Over 550	40	14, 20 or 40mm nominal single sized crushed rock or 14mm to 5mm graded or 20mm to 5mm graded or 40mm to 5mm graded

Maximum Compaction Fraction value for all granular bedding: 0.15

CLASS S BEDDING FOR RIGID AND FLEXIBLE PIPES

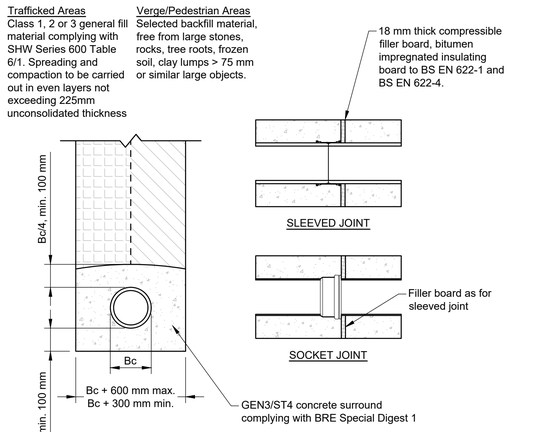

CLASS Z PIPE BEDDING

Concrete surround, rigid and flexible pipes

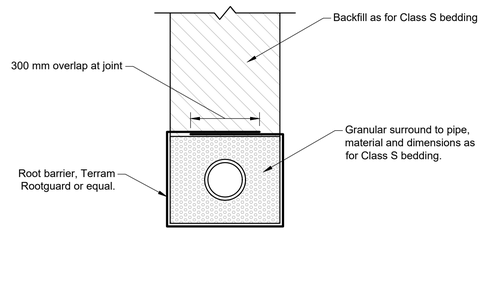

ROOT PROTECTION BARRIER TO PIPES

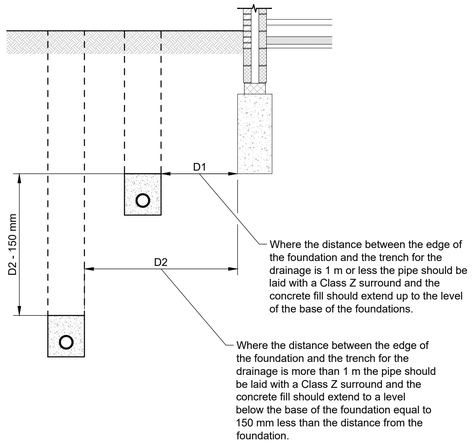

TRENCH FILL NEAR BUILDINGS

Strip, pad and raft foundations

GENERAL NOTES

1. This drawing is to be read in conjunction with all relevant architects, engineers and specialist drawings and specifications.
2. Do not scale from this drawing in either paper or digital form. Use written dimensions only.

DRAINAGE DETAIL NOTES

1. CDM note: all pipework, silt traps, catchpits, trapped gullies, attenuation tanks and pump chambers to be regularly inspected every three months and cleared out on a regular frequency for the first nine months. After this period the frequency can be reduced to every six months. Pump sets to be inspected and maintained in accordance with the recommendations of the manufacturer/pump provider. Porous surface to be regularly swept three times a year to remove the silt. Grease traps/interceptors are to be inspected/emptied at least once a month and, preferably, every two weeks.
2. Health and Safety: the works shall be carried out by specialist competent and experienced contractors who are members of a recognised national organisation. Operatives shall have received full and appropriate training for the operations they are to undertake. All work shall be carried out in accordance with all pertinent health and safety regulations.
3. Refer to the manufacturer's installation guidance for all specified products.

450 Ø INSPECTION CHAMBER

600 Ø INSPECTION CHAMBER

INSPECTION CHAMBER TYPICAL BASE ARRANGEMENT

LATERAL INSPECTION CHAMBER CONNECTION

PRECAST CONCRETE MANHOLE

PRECAST CONCRETE MANHOLE TYPICAL BASE ARRANGEMENT

Unless noted otherwise all details are as per the detail for a typical precast concrete manhole

PRECAST CONCRETE CATCHPIT BASE DETAIL

1. Unless noted otherwise all details are as per the detail for a typical precast concrete manhole.
2. Installation to be strictly in accordance with the manufacturer/supplier's requirements.

TYPICAL VORTEX FLOW CONTROL

NOT FOR CONSTRUCTION

Rev	Date	Description	Drawn	Check
P02	13.02.25	ISSUE FOR PLANNING	HV	AM
P01	31.01.25	STAGE 3 ISSUE	HV	AM

conisbee | Consulting Structural Engineers Consulting Civil Engineers
London • Cambridge • Norwich
1-5 Offord St London N1 1DH
Telephone 020 7700 6666
www.conisbee.co.uk

Drawing Status
S3 - SUITABLE FOR REVIEW & COMMENT

Project
MONKS WOOD
POLICE TRAINING CENTRE

Title
DRAINAGE DETAILS
SHEET 1 OF 3

Drawing No
MONKS-CON-ZZ-XX-D-C-1300

Date JAN 2025
Scale 1:20@A1
Drawn HV
Engineer AM
Project No **230340**
Revision **P02**