

BS5837:2012 -Trees in relation to design, demolition and construction. AIA, AMS & TPP in relation to trees at 1 Elton Gated Road, Water Newton, Peterborough.

Prepared by: East Midlands Tree Surveys Ltd.

Date: 19/12/2024

Limitations of use and copyright: All rights in this report are reserved. No part of it may be reproduced or transmitted, in any form or by any means, electronic, mechanical, photocopying, recording or otherwise, or stored in any retrieval system of any nature, without our written permission. Its content and format are for the exclusive use of the addressee in dealing with this site. It may not be sold, lent, hired out or divulged to any third party not directly involved in this site without the written consent of East Midlands Tree Surveys.

Contents

1. Instructions

2. Arboricultural Impact Assessment.

3. Arboricultural Method Statement & Tree Protection detail.

3.1 Sequenced Methods of Demolition, Construction and Tree Protection

3.2 Phase 1 - Undertake Arboricultural Works

3.3 Phase 2 - Tree protection measures.

Appendix 1: Impact Assessment Plan/Tree Protection measures.

Appendix 2: Fence specification.

Appendix 3. Signs.



1. Instructions

This report was commissioned by Gavin Common in relation to trees at 1 Elton Gated Road, Water Newton, Peterborough with instruction to provide the following in line with *BS5837:2012 Trees in relation to design, demolition and construction - Recommendations.*

- An Arb Impact Assessment along with an Arb Method Statement and Tree Protection details.
- This document should be read in conjunction with the Tree Constraints report dated 01/03/24

2. Arboricultural Impact Assessment.

See Appendix 1 for the Impact Assessment plans, Root Protection Areas in grey, crown spread in green.

Physical build footprint.

The proposed layout shows that G1 and G2 will need to be removed.

These groups are low quality specimens and have no public visual amenity and as such, should not be considered a constraint to development.

No other trees are to be removed.

There is a minor incursion into the RPA of T28 however at 13m, it is unlikely that there will be any significant rooting. Additionally, the total area incursion is 4%, as such, it is considered that specialist construction methods are disproportionate. Equally, it is considered that at this distance, it is unlikely that there will be any adverse effect on the tree.

Shade pattern

There is some shading to the building from the adjacent trees however the building will be low use only and belong to the applicant so there will be no pressure for pruning or tree removals.

Equally some shading is of benefit in terms of cooling properties.

Workspace & demolition of the existing workshop

T21-T26 will need to be crown raised over the site to a height of 3m and laterally pruned by 2m.

These works should allow for general access to the site work area and for the demolition phase.

3. Arboricultural Method Statement & Tree Protection detail.

3.1 Sequenced Methods of Demolition, Construction and Tree Protection

With reference to relevant published guidance, the methodology of this statement follows a logical sequence essential to the efficacy of the protection measures. Reference may include: British Standard BS 5837:2012 Trees in relation to design, demolition and



construction – Recommendations; British Standard BS3998:2010 Tree Work. It is essential to the successful implementation of the principles set out in this document that effective supervision and enforcement are put in place from the outset.

3.2 Phase 1 - Undertake Arboricultural Works

Remove G1 & G2.

Crown raise the boundary trees to 3m and laterally prune by 2m.

Tree work requires skilled operators to perform pruning tasks in order to maintain the health and safe useful life expectancy of the trees, it is strongly recommended that construction staff DO NOT carry out any tree works.

Additional to this, a legal Duty of Care requires that all works specified should be carried out by qualified arboricultural contractors who have been competency tested to determine their suitability for such works in line with Health and Safety Executive guidelines. All works should be carried out in accordance with British Standard BS3998:2010 Recommendations for Tree Work.

Particular care needs to be addressed in dealing with legally protected species such as nesting birds and roosting bats which are protected under the Wildlife and Countryside Act 1981 (as amended) from intentional harm and killing and applies to roosting and

hibernating bats and active bird nests. The protection of bird nests applies between mid-February to August inclusive.

3.3 Phase 2 - Tree protection measures.

The Tree Protection Plan can be found at Appendix 1.

Essentially, the footprint of the proposed patio will be paint marked out on site along with the RPAs of the adjacent trees to inform the fence run positions as per the indicative plan. The distances are below and will be measured from the centre of the trees as circles with the following radii: -

T21	2.8m
T23	3.6m
T24	3.6m
T25	1.8m

The fencing shall remain in place throughout construction and be removed only after completion of all works.

Due to the existing compacted ground, the default specification as per figure 3 of BS 5837:2012 will be used - see Appendix 2, in order to minimise the risk of damage to roots.

Within the fenced zone, no materials or chemicals should be stored at any time, no fires should be lit, no pedestrian or vehicle traffic, and level changes within these areas should be kept to an absolute minimum. Every effort should be taken to protect a maximum possible area of the root system.

Clear notices are to be fixed to the outside of the fencing with words such as

‘TREE PROTECTION AREA – NO ACCESS OR WORKING WITHIN THIS AREA’.

See Appendix 3. These notices shall be A3 in size, laminated and fixed to the fencing using suitable aids such as tie wires.

Patio installation

If roots are encountered during these works, then they must be worked around or pruned back carefully and sensitively to beyond the work area using hand tools such as pruning saw or secateurs. The pruning/cutting of roots greater than 20mm diameter must be carried out under the supervision of an arboriculturist. The cuts should be left clean with the smallest surface area possible without rips. Roots left exposed for more than one working day should be covered by damp sacking or similar to prevent drying and re-buried as soon as possible thereafter.

The site agent, all contractors and other relevant personnel are to be informed of the role of the Tree Protection Fencing and their importance. A copy of the Tree Protection Plan will be displayed on site at all times during construction.

A copy of the Tree protection Plan & Method Statement to be kept on site at all times.

An arboriculturist should be consulted where required during the construction process to address any issues that might arise regarding tree retention, protection, and management. It is the responsibility of the site owner, manager, and main contractor to ensure that any tree protection or other relevant planning conditions, or TPO’s are adhered to. A breach of a planning condition or TPO may result in enforcement action by the LA.

It will be necessary to supervise the operation of tall or wide machinery such as booms or jibs during the installation work in proximity to the canopies of retained trees.

It is recommended that a pre-commencement meeting be arranged with the contractors who may be operating the machinery to address/overcome any concerns about close by branches and to organize further mitigating pruning if required.

NHBC guidelines on foundation depth in proximity to trees should be followed. This will be determined by a structural engineer but should be guided by information in this report and appropriate sampling to determine soil profiles at the site.

[redacted] **– Director, East Midlands Tree Surveys LTD.**

Tech Cert (Arbor A), NDF For

19/12/24

East Midlands Tree Surveys Ltd

510600E
510620E
510640E
296420N
296400N
296380N
296360N
296340N

Fence run set back

CLOSEBOARDED TIMBER FENCE 1.8m HIGH + 150mm GRAVEL BOARD

CLOSEBOARDED TIMBER FENCE 1.8m HIGH + 150mm GRAVEL BOARD

POST + RAIL FENCE WITH 50x50 BLACK PVC COATED MESH 1.2m HIGH

T028 - B1,2
Ash

Gz - C1,2
Mixed broadleaves

T026 - B1,2
Ash

T025 - B1,2
Maple

T024 - B1,2
Ash

TP

T021 - B1,2
Hawthorn

T023 - B1,2
Ash

PATIO

GRASS

PAVING

3420

2000

GARAGE - approved under planning application ref 24/01229/HHFUL

Line of Existing Workshop to be Demolished

GRAVEL

HOUSE - Extension works approved under planning application ref 24/01229/HHFUL

GRASS

PATIO

POOL

POOL HOUSE - approved under planning application ref 24/01229/HHFUL

GRASS

N

Proposed Site Plan

0 1 2 3 4 5 10

NOTES

REVISIONS

Jon Richards Architectural Design

Jasmine House
1 Red House Paddock
Tallington PE9 4RG

info@jrad.co.uk
www.jrad.co.uk
+44 (0) 7970 288376

CLIENT
Common

PROJECT
1 Elton Gated Road
Water Newton
Peterborough
PE8 6LZ

DRAWING TITLE
Proposed Site Plan

SCALE
1:100 @ A0

DATE
October 2024

DRAWING NO
EGR-PR-PL-10

REV

Appendix 2: Fence specification.

Figure 3 Examples of above-ground stabilizing systems

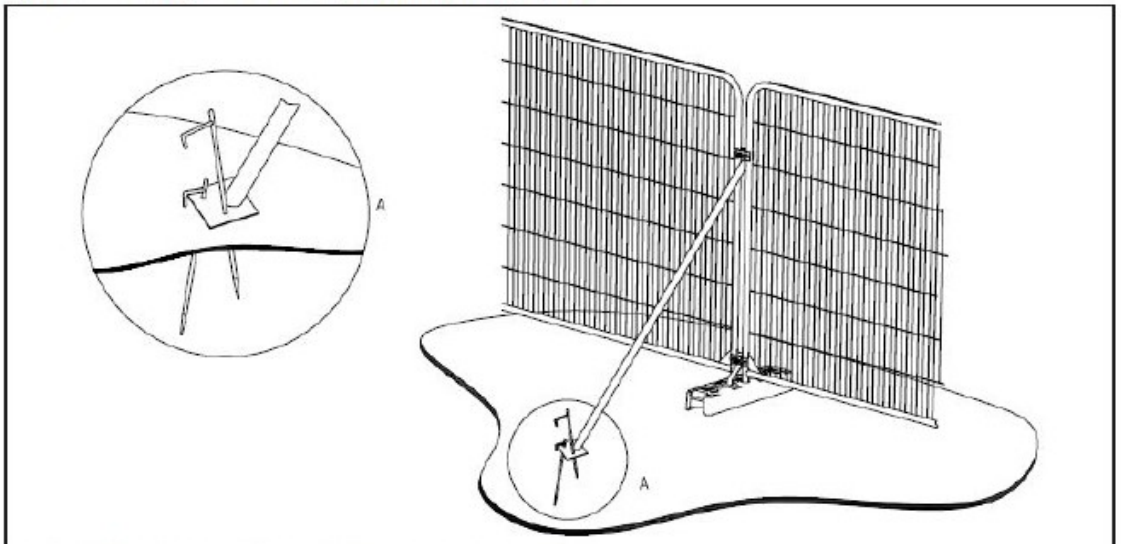

a) Stabilizer strut with base plate secured with ground pins

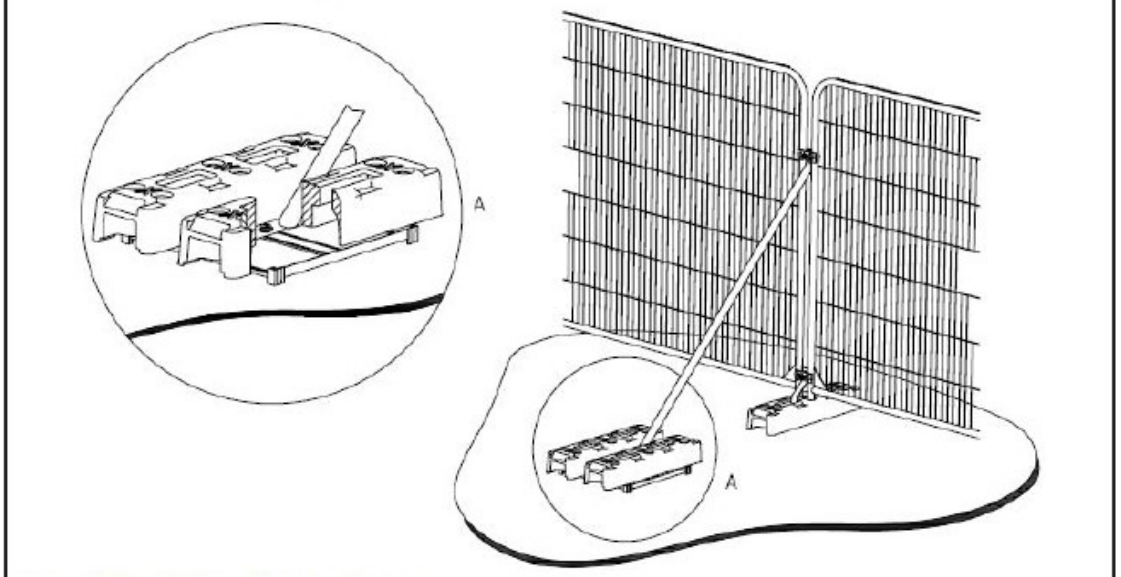

b) Stabilizer strut mounted on block tray

Appendix 3. Signs.

