

Project:
Welcome Break – Kates Cabin

Document:
Drive Thru' Restaurant Kitchen Ventilation Strategy

Client:
Welcome Break

Author:
James Forster

TLP Project No:
C9284

Thornley & Lumb Partnership Ltd
Building Services Consultant Engineers

Century House
257 Cutler Heights Lane
Bradford
BD4 9JG

Tel: +44 (0) 1274 687 755

Email: james.forster@thornleylumb.co.uk
Website: www.thornleylumb.co.uk

Document Control

Document	Drive Thru' Kitchen Ventilation Strategy Report
Project	Welcome Break – Kates Cabin
Client	Welcome Break
Job Number	C9284

Version	1.0
Document Date	6th June 2025
Prepared By	James Forster
Checked By	Nick Macina
Description of Revision	Planning

Executive Summary

This Odour Control strategy report produced by Thornley & Lumb Partnership details how the Odour Control strategies operate, the equipment provided and how each system complies with relevant regulations.

It has been carefully assessed to ensure that the existing environment can coexist with the proposed Drive Thru Units. With this in mind the ventilation strategies for the development have been carefully designed to ensure minimal impact on its surroundings and beyond the boundary of the site.

The report will detail and give relevant information and guidance on the canopy design, including the supply and extract ventilation rates / plant details and how to control and stop any issues which may arise from this installation i.e odour and noise issues. It also gives requirements and the installation of the ductwork and access for cleaning.

CONTENTS

1. INTRODUCTION 1
2. DEVELOPMENT DESCRIPTION 1
3. PROPOSED SCHEME 2
4. KITCHEN SUPPLY & EXTRACT VENTILATION 2
5. MAINTENANCE 5
6. GROUND FLOOR SUPPLY & EXTRACT & ODOUR TREATMENT ARRANGEMENT 6
7. PRODUCT DATA SHEETS 7

1. INTRODUCTION

The proposed development comprising of the construction of a New Build Starbucks Coffee Shop / Drive Thru' and Taco Bell Restaurant / Drive Thru' on the existing service station site.

This report has been prepared to provide details of the kitchen restaurant ventilation systems to address the requirements of Condition 15 of Planning Permission Ref 23/00876/FUL granted by Huntingdonshire District Council.

Condition 15 States :-

"No development above slab level shall commence until a scheme detailing plant, equipment or machinery for the purposes of extraction, filtration and abatement of odours has been submitted to and approved in writing by the Local Planning Authority. The approved scheme shall be installed before the use hereby permitted is commenced and retained as such."

2. DEVELOPMENT DESCRIPTION

The development involves the demolition of cabin truck stop and associated buildings, extension to petrol filling station kiosk unit, erection of 2no. drive-thru units , rationalisation of parking, provision of EV charging hub and improvements to site access, landscaping and associated works.

This report relates to the construction of the 2 No Drive Thru' units and specification the Taco Bell Restaurant Unit where commercial cooking will be undertaken. The Starbucks Drive Thru' unit will not require commercial kitchen ventilation due to the nature of the offering which is coffee, cakes and warming only of pre-cooked products, there is no commercial kitchen installation and would therefore not fall under EMAQ Guidance.

The site is located on the Northbound A1 Great North Road, Chesterton PE7 3UJ

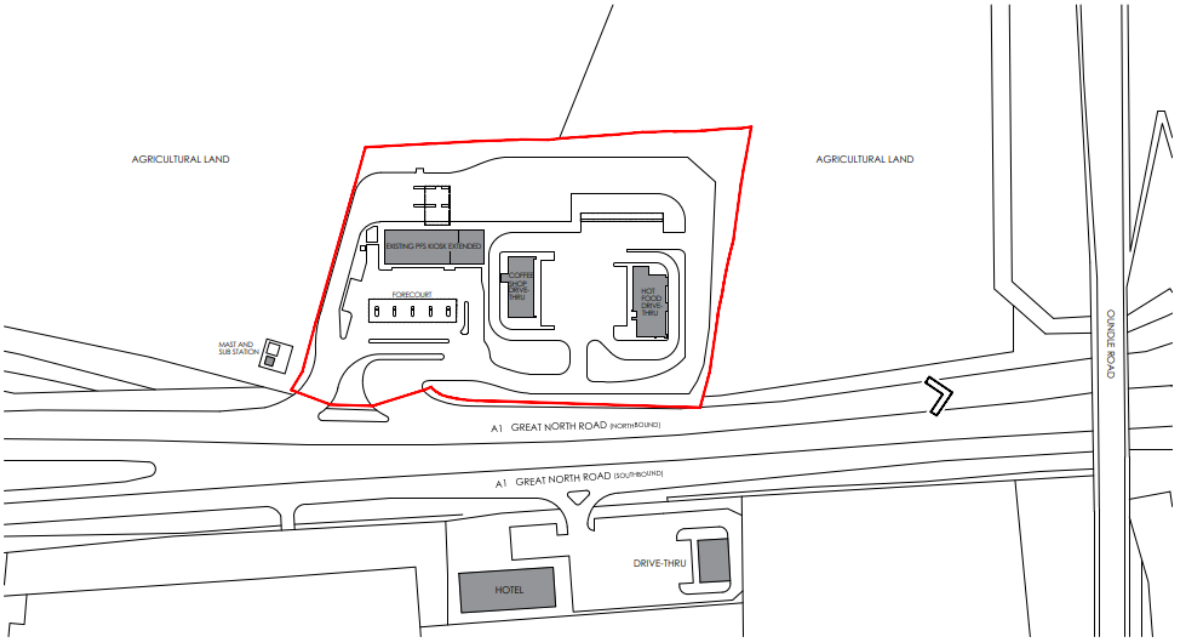

Figure 1 – Site Location Plan (With Proposed Building Indicated)

3. PROPOSED SCHEME

The proposed restaurant and drive thru' is to be a Taco Bell fast food outlet with commercial kitchen, dining in and drive thru' facilities

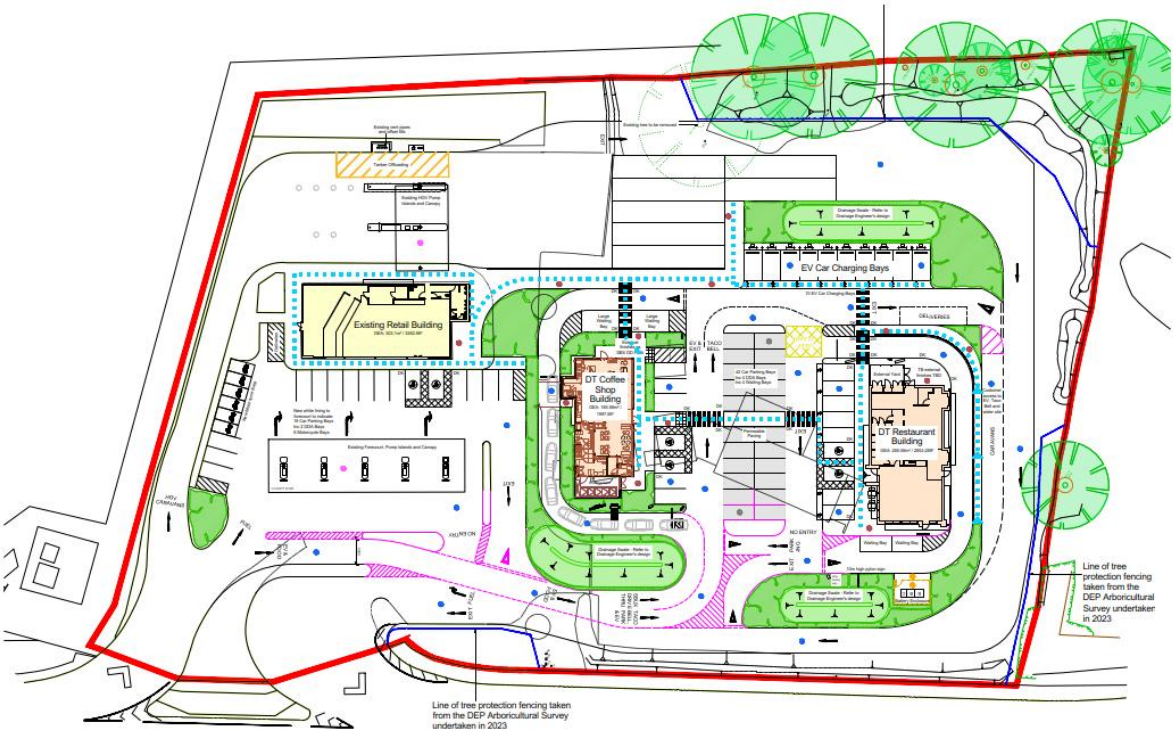

Figure 2: Proposed Site Plan

4. KITCHEN SUPPLY & EXTRACT VENTILATION

The kitchen is located at ground floor level and it is proposed that it will be mechanically ventilated and provided with ductwork systems designed in accordance with DW/172 2nd Edition, DW/144, TR/19 and EMAQ guidance.

Hours of Operation

The system is expected to operate for lunch and dinner between 11.00AM and 11.00PM

Kitchen Canopy

It is proposed that there will be 2 No wall type canopies positioned over the primary fryer areas with full length extract plenums fitted with stainless steel baffle type grease filters will be provided. In addition to the canopy extract ventilation general extract will be provided to the remaining kitchen area from ceiling mounted extract grilles.

The canopy is to be constructed from grade 304 satin finish stainless steel with all joints and seams welded and/or liquid tight. Removable stainless-steel grease collecting drawers are to be provided within the apron of the filter housing.

Make up mechanical supply air ventilation will be provided to the kitchen to provide balanced ventilation and this air will be introduced to the space through ceiling mounted grilles.

The anticipated total ventilation rates will be as follows:

Extract – 1.5 m³/s
Supply – 1.25 m³/s

The canopy is to conform fully to the standards and specifications of HVCA Specification for Kitchen Ventilation Systems DW172 2nd Edition. The grease filters are to comply with the requirements of LPS 1263.

Kitchen Extract

It is proposed that the kitchen will be served by a single extract system located within the kitchen ceiling void. Attenuators will be provided to ensure noise from the plant is in-line with the planning conditions. It is proposed that a suitable termination will be provided to discharge the exhaust air from the kitchen with an efflux velocity greater than 10m/s. The proposed discharge is through the external façade of the building at high level on the rear of the building over the delivery and service yard area.

Extract Ductwork

Access for cleaning the kitchen extract ductwork will be provided at a minimum of 2 meter intervals on both vertical & horizontal runs, all in accordance with section 25 of HVAC publication TR/19.

All ductwork shall be low pressure class A and be in accordance with DW/172 2nd Edition and DW/144. The kitchen extract ductwork will be routed through the ceiling void into the canopy connection spigots and ceiling mounted grilles. All ductwork will be suitably fire rated where required in accordance with BS3476 part 24 and BS9999.

Odour Control

In order to determine the level of odour the site will produce and the necessary mitigation measures needed, a risk assessment has been carried out in line with Appendix 3: Risk Assessment for Odour of EMAQ Guidance on the Control of Odour and Noise from Commercial Kitchen Exhaust Systems. The assessment summary is included for information.

The levels of risk are grouped in the table below.

Impact Risk	Odour Control Requirement	Significance Score*
Low to Medium	Low level odour control	Less than 20
High	High level odour control	20 to 35
Very high	Very high level odour control	more than 35

* based on the sum of contributions from dispersion, proximity of receptors, size of kitchen and cooking type:

Four areas of risk as assessment to work out the score for the system which can then be correlated to the level of odour control required as detailed above.

Criteria	Score	Score	Details
Dispersion	Very poor	20	Low level discharge, discharge into courtyard or restriction on stack.
	Poor	15	Not low level but below eaves, or discharge at below 10 m/s.
	Moderate	10	Discharging 1m above eaves at 10 -15 m/s.
	Good	5	Discharging 1m above ridge at 15 m/s.
Proximity of receptors	Close	10	Closest sensitive receptor less than 20m from kitchen discharge.
	Medium	5	Closest sensitive receptor between 20 and 100m from kitchen discharge.
	Far	1	Closest sensitive receptor more than 100m from kitchen discharge[1].
Size of kitchen	Large	5	More than 100 covers or large sized take away.
	Medium	3	Between 30 and 100 covers or medium sized take away.
	Small	1	Less than 30 covers or small take away[1].
Cooking type (odour and grease loading)	Very high	10	Pub (high level of fried food), fried chicken, burgers or fish & chips. *Turkish, Middle Eastern or any premises cooking with solid fuel*
	High	7	Vietnamese, Thai, Indian, *Japanese, Chinese, steakhouse*
	Medium	4	Cantonese, *Italian, French, Pizza (gas fired),*
	Low	1	Most pubs (*no fried food, mainly reheating and sandwiches etc*), *Tea rooms*[1]

Based on the matrix above the results are shown in the table below.

Description	Dispersion	Proximity of Receptors	Size of Kitchen	Cooking Type	Total Score
Welcome Break Kates Cabin TACO BELL	**Very Poor (20)** *It is proposed that the discharge termination will be at high level on the external facade*	**Medium (5)** *Closest Sensitive receptor between 20 – 100m from kitchen discharge*	**Medium (3)** Between 30 and 100 covers or medium sized take away. Restaurant	**Very High** (10) High Level of Fried Food	38
RESULTANT RISK					VERY HIGH
ODOUR CONTROL REQUIRED – VERY HIGH LEVEL					

The Kitchen Equipment to be installed on the cook line will be generally as follows: -

- 2 x Electric Twin Pan Fryer
- 1 x Electric Rethermalizer
- 1 x Electric Fry-Retherm
- 1 x Electric Clamshell Grill
- 2 x Electric Rice Cooker

Odour Control Proposal
It is proposed to install the following for odour control purposes :-

Electrostatic Precipitators (ESP)
The ESP's have been specifically designed for kitchen extract systems; they have integral sumps to collect the oil, grease and smoke particles filtered out of the exhaust. This not only simplifies servicing but eradicates potentially dangerous spillage from the bottom of the units and greatly cuts down on build-ups of grease within the ducting.

The ionisation voltage has been designed to run at a negative potential which enhances the ionisation of particles and also produces more ozone which is helpful in reducing cooking odours.-

Key Features
- Eliminates up to 98% of oil, grease and smoke particles
- Filters particles down to sub-micron levels
- Produces Ozone to help reduce malodours
- Designed with an integral sump
- Modular in design
- Specifically designed for commercial kitchen application
- Energy efficient: - uses no more than 50W
- Greatly reduces grease build-up within the duct run

1 No ESP units capable of handling 1.5m3/s Total will be installed

Typical ESP Unit



Multi Filtration Unit (MFU) Treatment

The MFUs are designed explicitly for kitchen extract systems; they collect the oil, grease and smoke particles filtered out of the exhaust through a combination of passive air filters, including panel, bag, HEPA and carbon.

The high-quality unit can house multiple filter combinations and is effortlessly serviced, replaced or even re-configured to provide continually effective and affordable kitchen extract particulate control. Additionally, the units help reduce grease build-up within the ducting and reduce odours.

Its modular design means units can be configured in various ways to handle any required flow rate, providing effective and efficient kitchen extract filtration.

Carbon Filters

Site Safe carbon filters use panels of activated carbon to remove the malodourous gases within the commercial kitchen extract duct through the process of chemical adsorption. By installing our ESP units before the Site Safe filters, the carbon life span is greatly increased, allowing it to nullify malodours at optimum efficiency for much longer.

Typical MFU Unit



Key Features
Modular in design
Endless combinations of passive filtration
Multiple configurations
Built for stock / No lead times

5. MAINTENANCE

Recommendations for Maintenance of Odour Control System include:

- System employing fine filtration and Carbon filtration:
  - Change fine filters every two weeks
  - Change Carbon filters every 4 to 6 months

- System employing ESP and other inline abatement, typically:
  - ESP systems cleaned, and sump emptied on a four weekly basis
  - Carbon Filters with ESP pre-treatment change carbon filter every 6 to 12 months

- Other maintenance recommendations:
  - The Canopy Grease Filters are washed on a daily basis
  - All Fans & Equipment are checked
  - All Extract ductwork from the Canopy to the riser are cleaned on a 6 Monthly Basis

6. GROUND FLOOR SUPPLY & EXTRACT & ODOUR TREATMENT ARRANGEMENT

Below is an indicative layout of the proposed kitchen supply and extract ventilation system incorporating the odour control and associated fans.

The Kitchen Supply & Extract ductwork will run within the ceiling void over the kitchen are from the rear external façade with the equipment located within the ceiling void. All ductwork and plant will be accessible through the grid ceiling below.

The Kitchen Extract will be design to 100% duty with supply air being 85% to create a negative pressure within the kitchen area to prevent migration of odours into the customer seating areas. It is proposed that the supply air system is installed in accordance with DW172 Section 6 and incorporate all the necessary interlocks in accordance with BS6173.

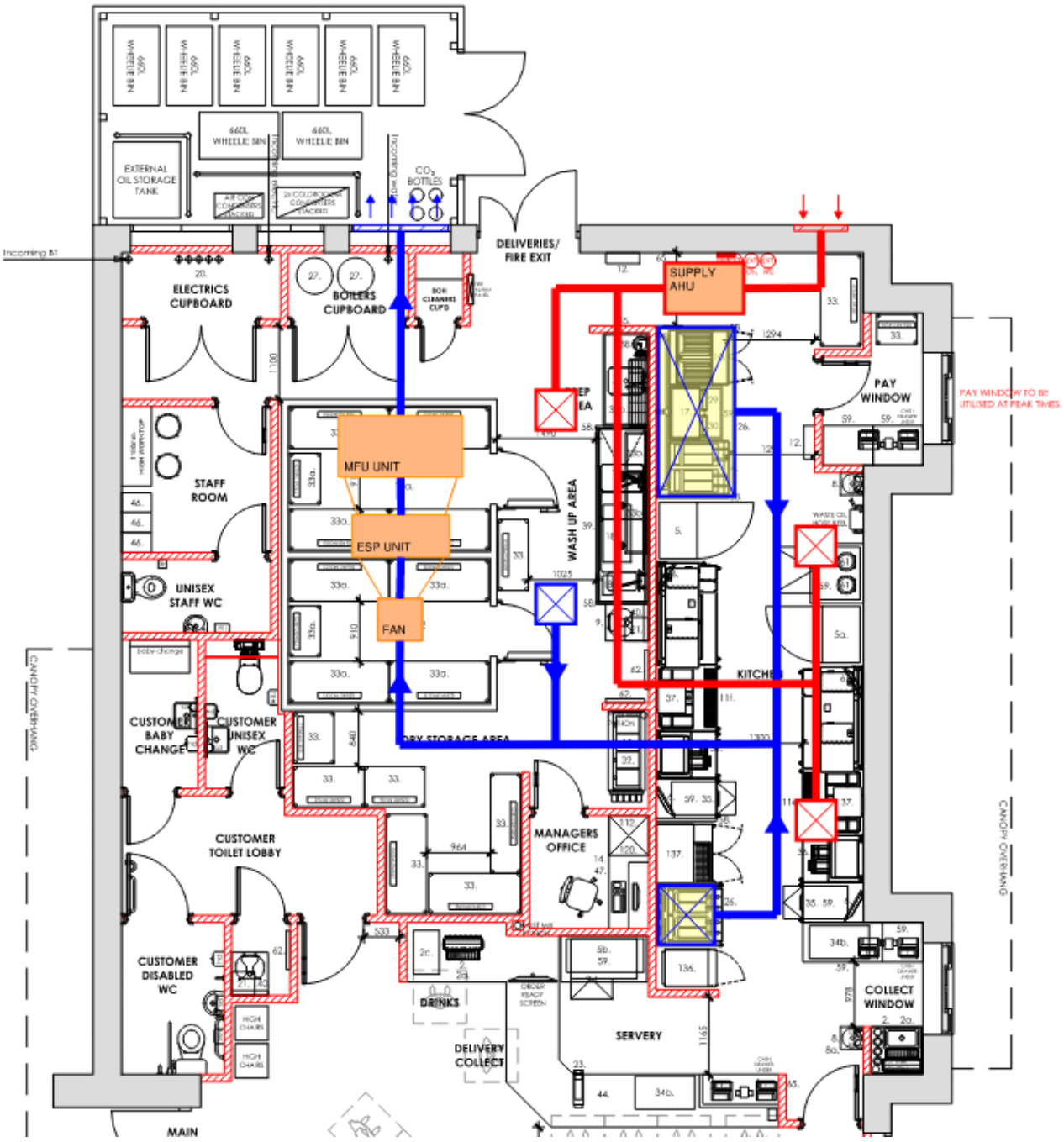

Figure 3: Kitchen Layout

7. PRODUCT DATA SHEETS

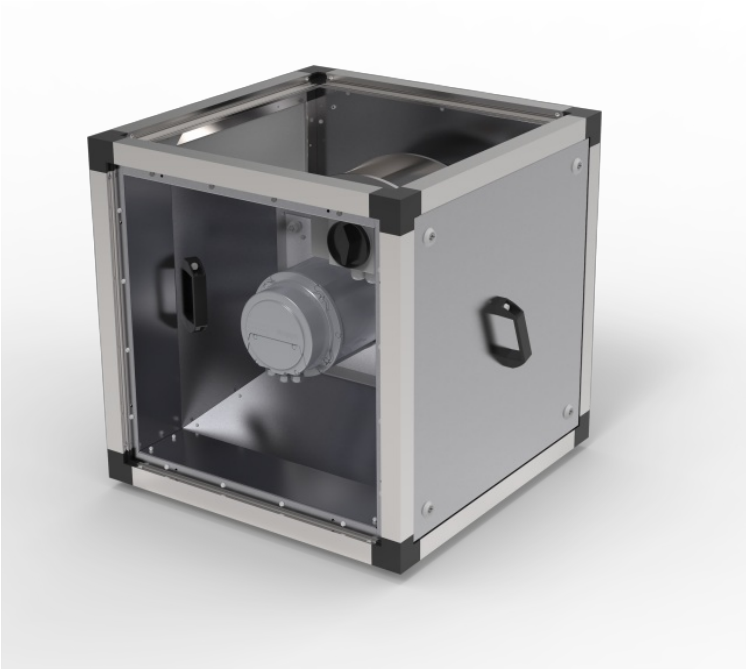

MUB/T Insulated duct fans

Powerful and efficient exhaust fans for medium temperatures up to 120°C

- For kitchen and industrial environments
- Up to 120°C medium temperature, continuous operation
- Drip pan and drain plug included
- Acoustic and thermal insulation 30 mm
- Flexible airflow direction
- Indoor and outdoor installation
- Modular system of accessories
- Available with AC and EC motors for 50 and 60Hz

Find more details in our online catalogue

Application

The MUB/T fans are specially designed to **extract** air from **kitchen environments** or **industrial applications**, where **motor** must be placed **outside of air stream**. **Drip pan** with **drain plug** on bottom (except MUB/T 100 630D4-K2-L) are constructed for **collecting** a draining **dust, oil, water**.
By MUB/T and MUB/T-S fans an easy **maintenance** is provided through **service door** with handle.

Flexibility

Depending on the type, MUB/T fans are designed for **straight through** or **90°** airflow. The **air direction** can be easily **changed** on site. The construction of the casing and thermal insulation permits **outdoor** and **indoor** use.

Performance

High-performance aluminium impeller together with **highly efficient** motors are designed to ensure high-level performance to **minimise power consumption** and **maximise efficiency**.

Modularity

Thanks to variety types of **accessories** as flexible connections, dampers, roof, base frame, etc. it is easy to design any ventilation system according to your demand.
By using special **modular systems**, where some accessories as **heaters, coolers, silencers, filters** or **carbon filters** are built-in in **the same type of casing**, you can even design a simple supply or exhaust **air handing unit.**

Features

Construction

The casing consists of a corrosion-resistant **aluminium frame** with **fibreglass reinforced plastic corners of PA6**; highly shock-resistant. **Panels** made of **double skin galvanised** sheet steel with **30 mm acoustic** and **thermal** rockwool **insulation**.
The **MUB/T** and **MUB/T-ECO** fans are designed for **90° airflow**.
The **MUB/T-S** fans are designed for **straight through airflow**.
Air direction can be easily **rebuilt** on site by **changing** with **service doors (MUB/T).**
Revision switch is **included** and **prewired for MUB/T** and **MUB/T-S.**
The **MUB/T-ECO** is **without revision switch** and **service door.**
Aluminium drip with **drain plug is** placed on **bottom** of casing (except MUB/T 100 630D4-K2-L).

Impeller

The MUB/T fans use **radial** impeller with **backward curved blades**. These are made out of aluminium, dynamically **balanced** and paired with corresponding **IEC motor** with efficiency **IE3 or EC motor**.

Motor

Depending on the type, MUB/T fans are equipped with **AC** or **EC** external rotor motors. Motors are suitable for **50Hz** and **60Hz.**

Motor protection

Depending on the type, **AC** motors have an **integrated** thermal protection with manual (electrical) reset, pre-wired integral **thermocontact TK** or **thermistor PTC** with leads to a **motor protection device**.
Fans with **EC** motors have an **integrated** electronic **thermal protection** including **locked-rotor protection** and **soft-start**.

Control

EC motors with **built-in potentiometer** to adjust working point can be also controlled by external **signal 0-10V.**
EC motors, depending on the type are also equipped with **ModBus** communication **or alarm signal.**
AC motors can be controlled by **5-step, stepless** speed regulator, **D/Y** switch or **frequency converter.**

Installation

For correct drainage the MUB/T fans must be installed in position with drip pan down. Fans can be installed in any position **indoor** and together **with weather protection roof** also **outdoor**. With mounted **base frame** the MUB/T fans can stand **on floor**. For **preventing vibration** to the duct it is recommended to use **flexible connections.**

Technical parameters

Nominal data		
Voltage (nominal)	400	V
Frequency	50	Hz
Phases	3~	
Input power	2,816	W
Input power kW	2.816	kW
Input current	4.18	A
Impeller speed	1,512	rpm
Air flow	max 4.1644	m^3/s
Temperature of transported air	max 120	°C
Max temperature of transported air, when speed controlled	120	°C

Protection/Classification	
Enclosure class, motor	IP55
Insulation class	F

Data according to ErP	
ErP ready	Not ErP relevant

Dimensions and weights		
Weight	114.5	kg

Others	
Duct connection type	Square
Motor type	EC

Performance

Performance curve

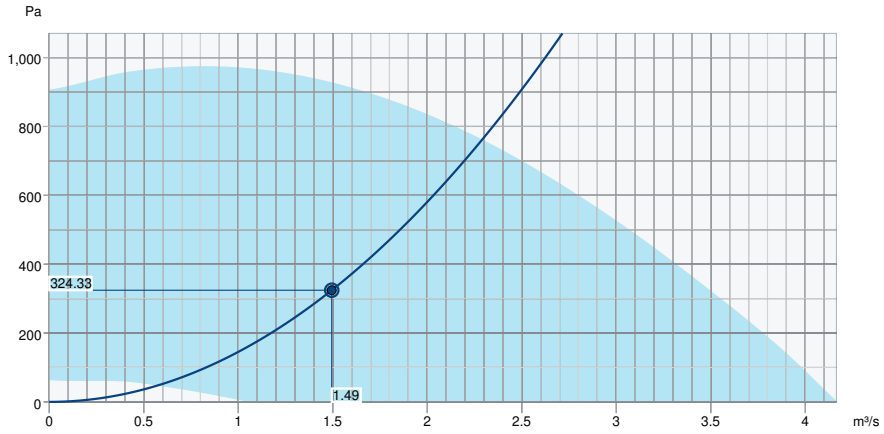

Hydraulic data	
Required air flow	1.49 m³/s
Required static pressure	324 Pa
Working air flow	1.49 m³/s
Working static pressure	324 Pa
Air density	1.204 kg/m³
Power	844.1 W
Fan control - RPM	969 rpm
Current	1.34 A
SFP	0.565 kW/m³/s
Control voltage	5.7 V
Supply voltage	400 V

Sound power level		63	125	250	500	1k	2k	4k	8k	Total
Inlet	dB(A)	47	58	60	64	64	62	57	56	70
Outlet	dB(A)	48	59	61	66	66	63	58	58	71
Surrounding	dB(A)	30	45	45	37	37	37	29	25	49
Sound pressure level at 3m (20m² Sabine)	dB(A)	-	-	-	-	-	-	-	-	42
Sound pressure level at 3m free field	dB(A)	-	-	-	-	-	-	-	-	28

Dimension

MUB/T 062	□A	□B	□C	□D	E
500/560/630	820	820	720	678	21

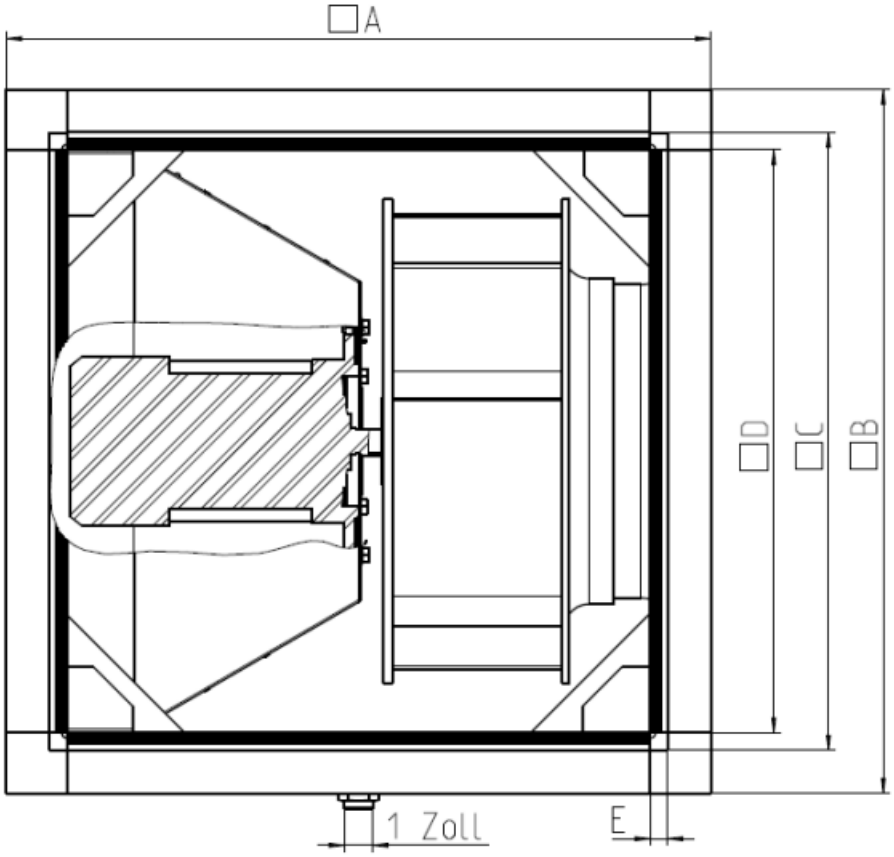

Accessories

- CXE/AVC Modbus (37256)
- EC-Basic-H humidity (24807)
- EC-Basic-U universal 0-10V (24806)
- EC-Vent Room Unit (3018)
- MTP 10, 10K, Speed control (32731)
- Potentiometer MTP 20, 0-10V (310220)
- Step switch S-5EC, 0-10V (76738)
- UGS 062/500 adapter flex 120°C (38370)
- UGS 062/630 adapter flex. (4358)
- WSG 062 MUB/T complete (36067)
- HR1 Room Humidistat (215150)
- RT 0-30 Room Thermostat (5151)
- CCM inlet MUB062 d630 (311783)
- CCM outlet MUB062 d630 (311681)
- CCMI outlet 062 d630 KIT 30mm (239096)
- KKF 30 062-filter-section (93312)
- KKF-CAR 062-filter-section (277347)
- KKF-KITCHEN 062-filter-section (277364)
- KKS 062 silencer-section (276852)
- SDM Service Door MUB 062 30mm (273935)
- EC-Basic-CO2 and temperature (24808)
- EC-Basic-T temperature (24805)
- EC-Vent control board (3115)
- FGV 062/716-716 flex. conn. (4198)
- MTV-1/010 Controller 0..10V+ (30650)
- SD-MUB Vibration pad set (37324)
- Step switch S-5EC-2, 0-10V (449084)
- UGS 062/630 adapter flex 120°C (38371)
- WSD 062 (860x860x70) complete (31482)
- FGV 062/716-716 flex. 120°C (38362)
- Presence detector/IR24-P (6995)
- CCM inlet MUB062 d560 (311782)
- CCM outlet MUB062 d560 (311684)
- CCMI outlet 062 d560 KIT 30mm (239095)
- GRU 062-820/100 (276662)
- KKF-ALU 062-filter-section (376816)
- KKF-CAR 100-filter-section (277348)
- KKF-KITCHEN 100-filter-section (277367)
- MUB/T 062 630EC (454834)

Documents

- Installation, Operation and Maintenance instruction_001
- UKCA DECLARATION OF CONFORMITY_THERMOFANS_EN_002.PDF
- COMMISSIONING REPORT_FANS_160628_EN_001.PDF
- MUB-T 042 500-560 EC-Poti_37204_DE-EN.pdf

KITCHEN EXTRACT

ESP RANGE

1500 | 3000 | 4500 | 6000

purifiedair®

COMMERCIAL KITCHEN FILTRATION EXPERTS

Purified Air Ltd. has been manufacturing and servicing market-leading technology to filter and control oil, grease, smoke and odour from commercial kitchens since 1984.

CONTENTS

02 TECHNICAL OVERVIEW

Key Features 02
ESP Technology 03
How It Works 04
Benefits of ESP 05
Technical Specification 06

08 ABOUT US

An Overview
Our Coverage

09 GET IN TOUCH

Contact Details

KITCHEN EXTRACT

ESP RANGE

1500 | 3000 | 4500 | 6000



Our ESPs have been specifically designed for kitchen extract systems; they have integral sumps to collect the oil, grease and smoke particles filtered out of the exhaust.

This not only simplifies servicing but eradicates potentially dangerous spillage from the bottom of the units and greatly cuts down on build-ups of grease within the ducting.

The ionisation voltage has been designed to run at a negative potential which enhances the ionisation of particles and also produces more ozone which is helpful in reducing cooking odours.

KEY FEATURES

- Eliminates up to 98% of oil, grease and smoke particles
- Filters particles down to sub-micron levels
- Produces Ozone to help reduce malodours
- Designed with an integral sump
- Modular in design
- Specifically designed for commercial kitchen application
- Energy efficient: - uses no more than 50W
- Greatly reduces grease build-up within the duct run
- IP65 rated for outside location

FILTERS REMOVE



HOW IT WORKS

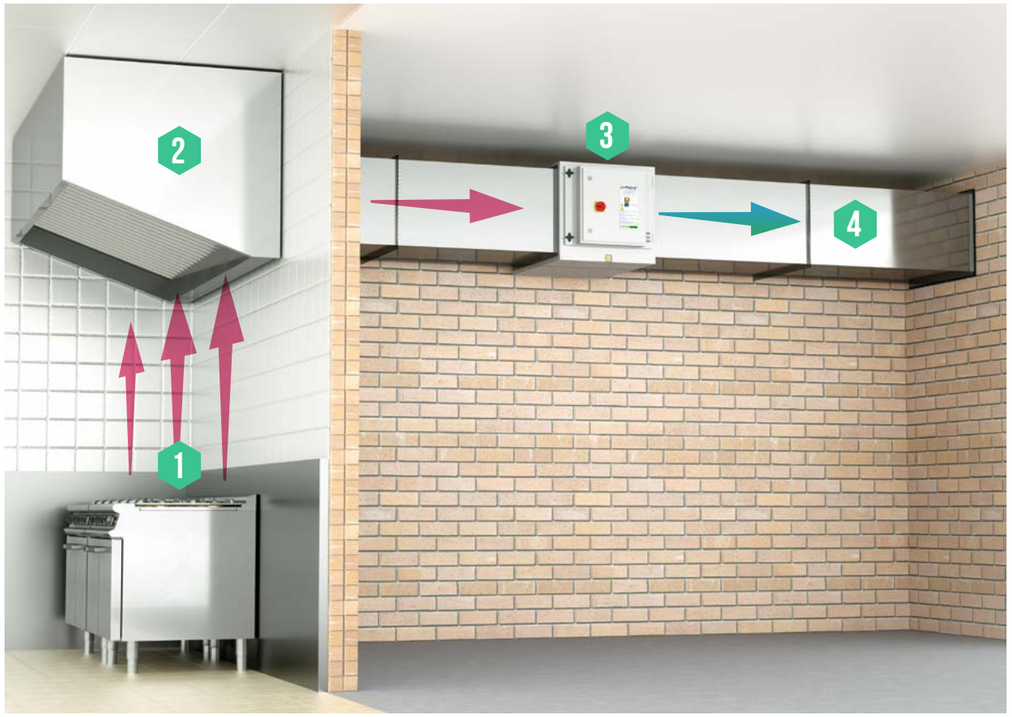

Our ESP units fit in-line with the kitchen ducting and can be configured modularly to cope with all extract volume requirements.

01 Cooking particulates and odours

02 Canopy Grease Filter

03 ESP - Particulate Control Unit

04 Airflow

OUR SERVICES

Design

Manufacture

Maintain

THE ELECTROSTATIC PROCESS

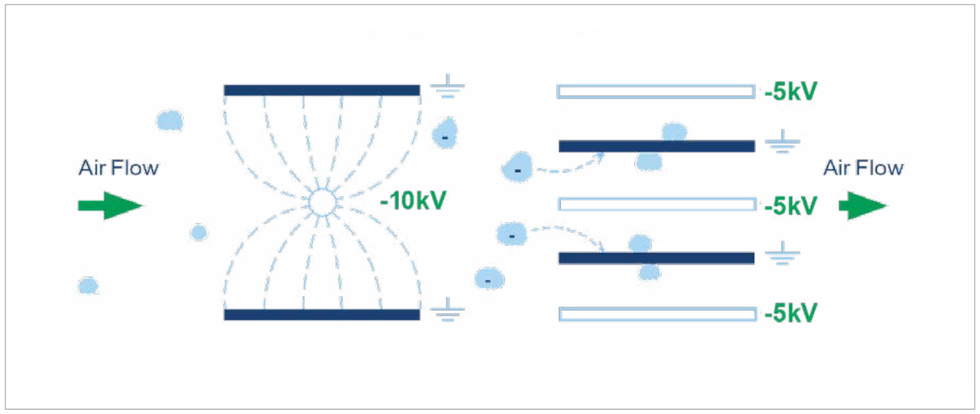

The above diagram shows, in a basic visual, how an electrostatic precipitator works:

As air passes into the combined ioniser / collector cell, the particulates in the air stream are polarised. As they continue through the ioniser and between the collector cell plates, the polarised particulates are repelled away from the negatively charged plates and attracted to the earthed plates where they stick and so are filtered out of the air flow.

THE BENEFITS OF ELECTROSTATIC TECHNOLOGY

Eliminates up to 99% of particles

Filters particles down to sub-micron levels

Modular design

Energy efficient

TECHNICAL SPECIFICATION

	ESP 1500	ESP 3000	ESP 4500	ESP 6000
Supply	220-240V 50-60HZ	220-240V 50-60HZ	220-240V 50-60HZ	220-240V 50-60HZ
Power Consumption	20W	30W	40W	50W
Maximum Airflow	0.7 M³/SEC (UP TO)	1.4 M³/SEC (UP TO)	2.1 M³/SEC (UP TO)	2.8 M³/SEC (UP TO)
Dimensions (mm)	W 450 H 630 D 640	W 900 H 630 D 640	W 1350 H 630 D 640	W 1800 H 630 D 640
Weight	55KG	85KG	118KG	153KG

Please note: This equipment needs to be interlocked with the extract fan.

DRAWINGS

ESP 1500

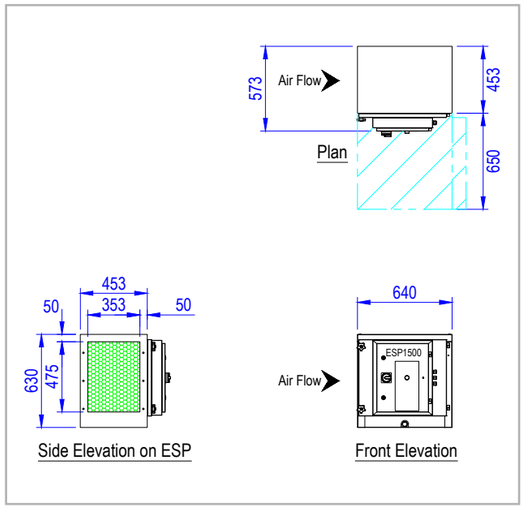

ESP 3000

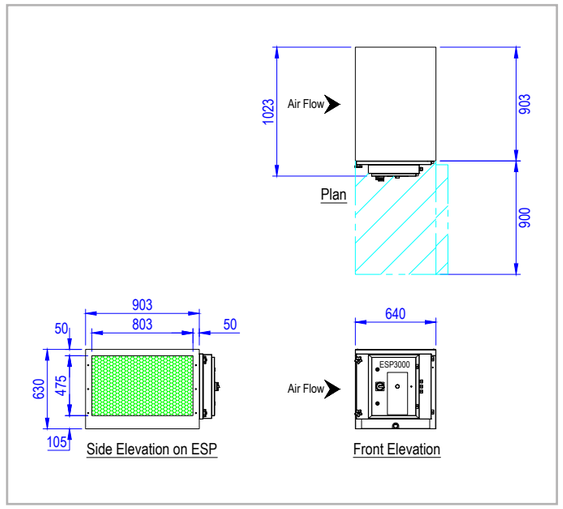

ESP 4500

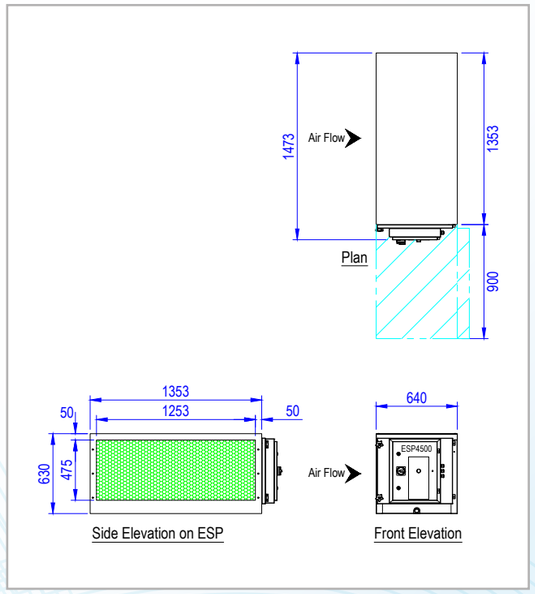

ESP 6000

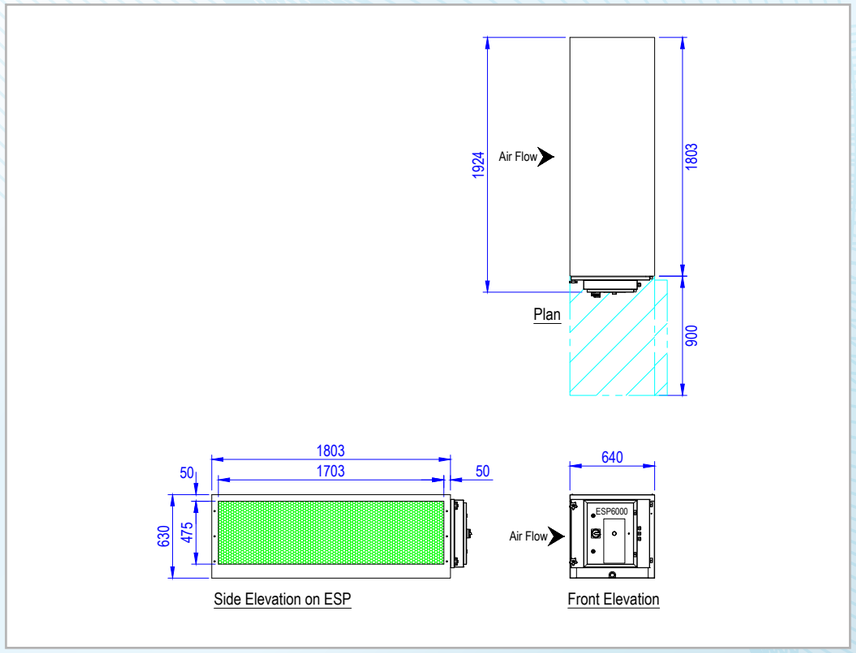

ABOUT US

Purified Air Ltd. has been striving to find the best and most cost-effective way to filter and control oil, smoke, fat and odour produced by commercial kitchens and service since 1984.

Purified Air manufactures filtration and odour control products for stock and bespoke systems, supplying systems to many sectoral brands. The design of each solution is based on the type of food cooked, the cooking process used, and the extracted air volume providing tried and tested purified kitchen exhaust air for Fast Food, Casual Dining and Luxury Concept Restaurant (Fine Dining) markets. By working with these variables, we can design and supply some of the world's best commercial kitchen filtration and odour control systems.

WORLDWIDE COVERAGE

- United Kingdom
- Middle East
- Europe
- North America
- Asia
- Australasia

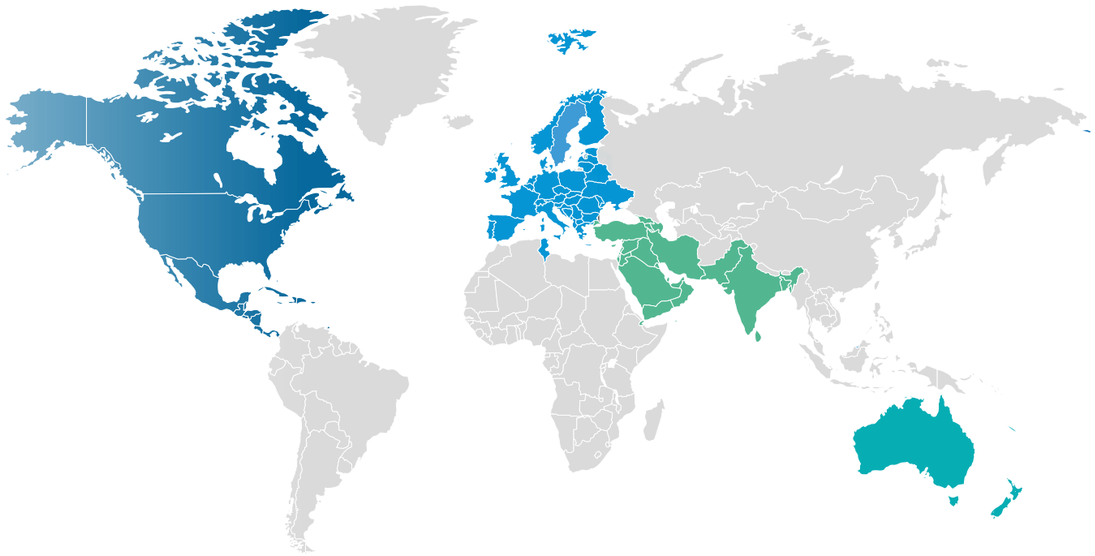

GET IN TOUCH

01708 755 414
enq@purifiedair.com
Purified Air Limited, Lyon House
Lyon Road, Romford,
Essex RM1 2BG

purifiedair.com

purifiedair®

purifiedair.com

KITCHEN EXTRACT

MFU RANGE

MULTI FILTRATION UNIT

purifiedair®

COMMERCIAL KITCHEN FILTRATION EXPERTS

Purified Air Ltd. has been manufacturing and servicing market-leading technology to filter and control oil, grease, smoke and odour from commercial kitchens since 1984.

CONTENTS

02 TECHNICAL OVERVIEW

Key Features 02
Our Filters 03
How It Works 06
Modular System 07
Technical Specifications 08

12 ABOUT US

An Overview
Our Coverage

13 GET IN TOUCH

Contact Details

KITCHEN EXTRACT

MFU RANGE

MULTI-FILTRATION UNIT



Our MFUs are designed explicitly for kitchen extract systems; they collect the oil, grease and smoke particles filtered out of the exhaust through a combination of passive air filters, including panel, bag, HEPA and carbon.

The high-quality unit can house multiple filter combinations and is effortlessly serviced, replaced or even re-configured to provide continually effective and affordable kitchen extract particulate control. Additionally, the units help reduce grease build-up within the ducting and reduce odours.

Its modular design means units can be configured in various ways to handle any required flow rate, providing effective and efficient kitchen extract filtration.

KEY FEATURES

- Built for stock
- Multiple configurations
- Eliminates oil, grease, smoke particles and odours
- Modular in design
- Filters particles down to submicron levels
- Endless combinations of passive filtration
- Specifically designed for commercial kitchen application
- Greatly reduces grease build-up within the duct run

FILTERS REMOVE

Smoke

Steam

Oil

Grease

OUR FILTERS



PANEL FILTERS

Our pleated panel filters are constructed using a core of pleated fibrous media designed specifically for use in air filtration. This is then thermally bonded onto a galvvanised steel support mesh for maximum rigidity which is then fully bonded into a moisture resistant rigid white lined card frame. These filters are used as stand-alone pre filters or as a pre filter to bag filters filtering oil and grease particles.



BAG FILTERS

Our general purpose bag filters are manufactured using a galvanised steel header to retain the pocket sets.

The pockets are produced from synthetic micro-fibres specifically designed for use in air filtration. They can be applied as a pre filter to carbon cells in malodour extraction, taking out oil and grease particles ahead of the carbon filter stage.



HEPA FILTERS

To qualify to be called a High-Efficiency Particulate Air or HEPA filter, the filter must be able to remove, from the air that passes through it, 99.97% of particles down to a sub-micron level of 0.3 microns. Our main use of HEPA filtration is the removal of smoke particles. We do supply many different sizes and grades of HEPA filters so please contact us with your requirements.



CARBON FILTERS

Our site safe carbon filters use panels of activated carbon to remove the malodourous gases within the commercial kitchen extract duct through the process of chemical adsorption. By installing adequate pre-filtration before our site safe filters, the carbon life span is greatly increased, allowing it to nullify malodours at optimum efficiency for much longer.

HOW IT WORKS

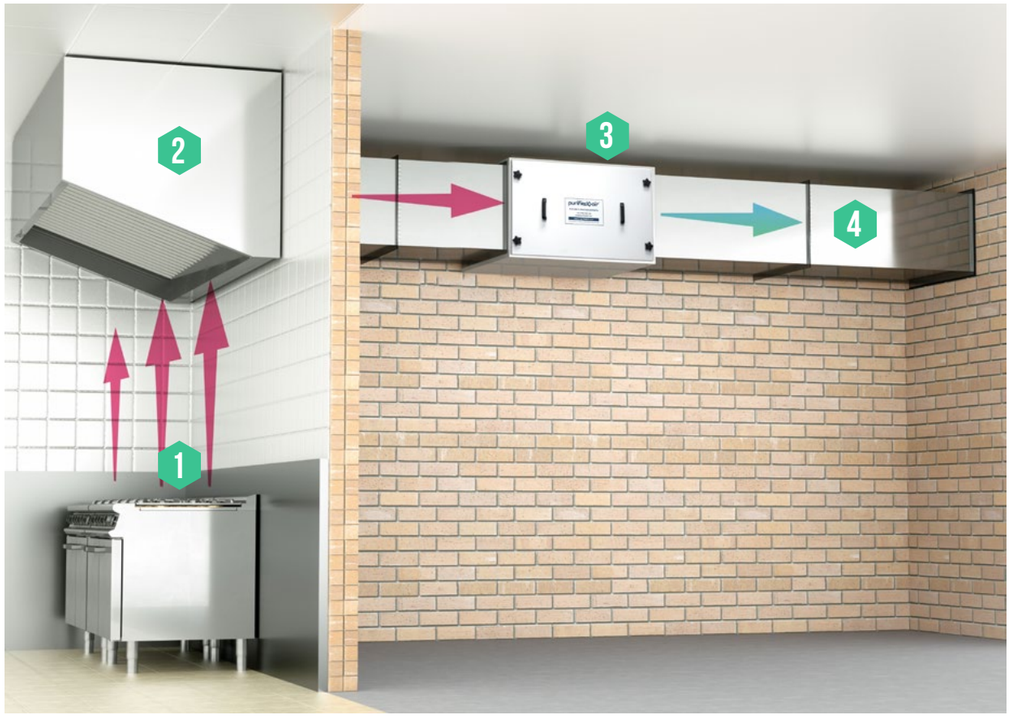

Our MFUs fit in line with the kitchen ducting and can be configured modularly to cope with all extract flow rates.

01 **Cooking particulates and odours**

02 **Canopy Grease Filter**

03 **MFU Unit**

04 **Airflow**

OUR SERVICES

Design

Manufacture

Maintain

MODULAR SYSTEM

Our system allows specifiers and installers to create a wide range of configurations which contain a customisable combination of different air filters. This provides a tailored, cost-effective air filtration solution.

MFU 600



MFU 1200



MFU 1800



SAMPLE CONFIGURATIONS

2 X MFU 600



2 X MFU 1800



TECHNICAL SPECIFICATIONS

GLOBAL SPECIFICATIONS					
`FILTERS		Width(mm)	Height	Depth	Weight (kg)
Panel	45mm	595	595	45	0.5
	95mm	595	595	95	0.5
Bag	300mm	592	592	300	1.5
HEPA	300mm	592	592	300	18
Carbon	Site Safe	594	597	195	25
CASINGS ONLY					
MFU 600		640	630	925	55.5
MFU 1200		1245	630	925	78
MFU 1800		1885	630	925	133.5

MFU 600

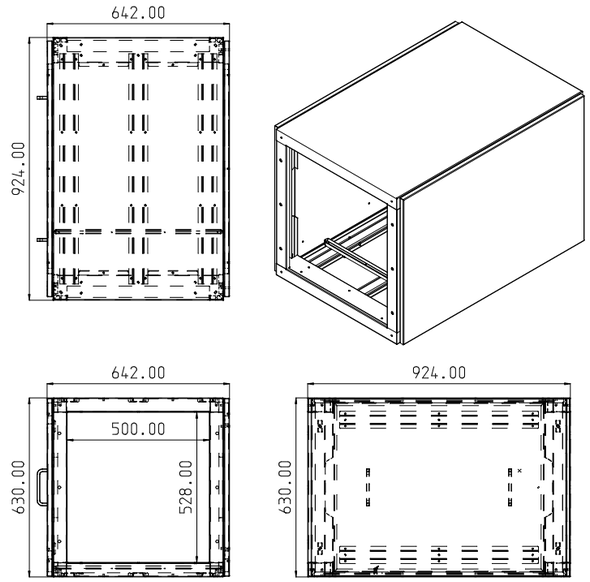

MFU 600						
		Model A1	Model A1 (C)	Model B1	Model E2	Model F2
Panel	45 mm					
	95 mm	1		1	1	1
Bag	300 mm			1		1
HEPA	300 mm			1		1
Carbon	Site Safe (195 mm)	3	3		6	3
Flow Rate*	Maximum (m^3/s)	$1m^3/s$	$1m^3/s$	$1m^3/s$	$1m^3/s$	$1m^3/s$
Weight (kg)		110	279	76	220	186
No. Units		Single	Single	Single	Double	Double
Pressure Drop	at 0.7 m^3/s (Pa)	119	110	197	204	282
Dimensions						
Width (mm)		640	640	640	640	640
Height (mm)		630	630	630	630	630
Depth (mm)	(Direction of airflow)	925	925	925	1850	1850

* Flow Rate – unit selection dependent on air flow rate and cooking style

MFU 1200

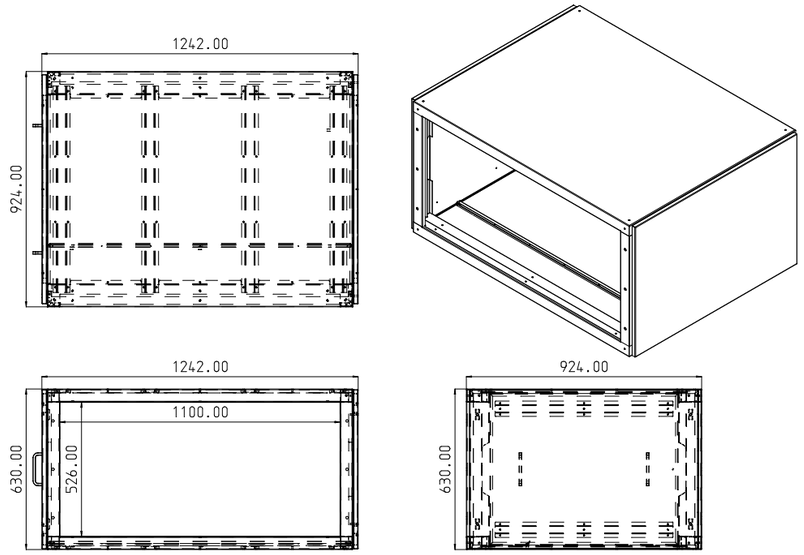

MFU 1200						
		Model A1	Model A1 (C)	Model B1	Model E2	Model F2
Panel	45 mm					
	95 mm	2		2	2	2
Bag	300 mm			2		2
HEPA	300 mm			2		2
Carbon	Site Safe (195 mm)	6	6		12	6
Flow Rate*	Maximum (m^3/s)	$2m^3/s$	$2m^3/s$	$2m^3/s$	$2m^3/s$	$2m^3/s$
Weight (kg)		187	186	118	372	304
No. Units		Single	Single	Single	Double	Double
Pressure Drop	at 1.5 m^3/s (Pa)	126	90	211	216	301
Dimensions						
Width (mm)		1245	1245	1245	1245	1245
Height (mm)		630	630	630	630	630
Depth (mm)	(Direction of airflow)	925	925	925	1850	1850

* Flow Rate – unit selection dependent on air flow rate and cooking style

MFU 1800

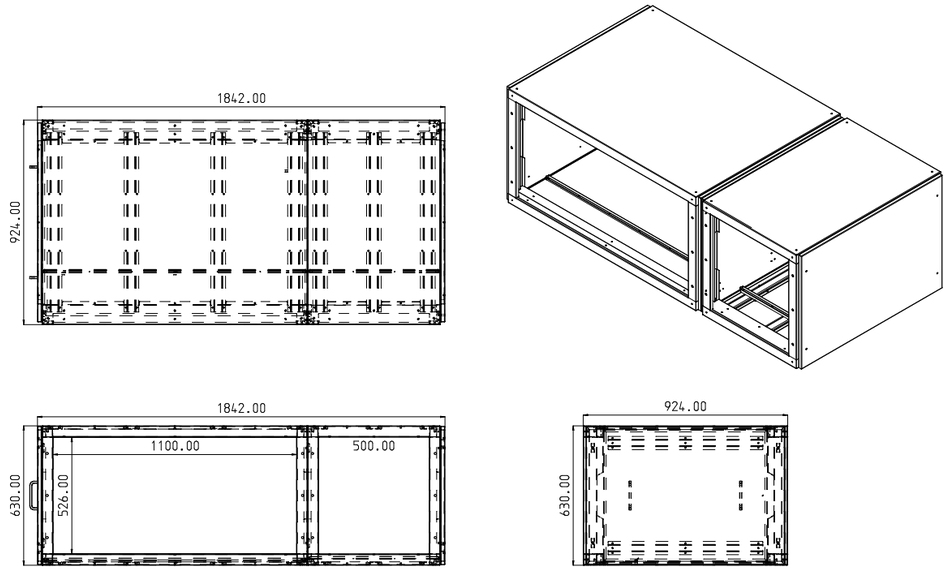

MFU 1800						
		Model A1	Model A1 (C)	Model B1	Model E2	Model F2
Panel	45 mm					
	95 mm	3		3	3	3
Bag	300 mm			3		3
HEPA	300 mm			3		3
Carbon	Site Safe (195 mm)	9	9		18	9
Flow Rate*	Maximum (m^3/s)	$3m^3/s$	$3m^3/s$	$3m^3/s$	$3m^3/s$	$3m^3/s$
Weight (kg)		280	279	177	560	456
No. Units		Single	Single	Single	Double	Double
Pressure Drop	at 2.5 m^3/s (Pa)	150	110	245	220	355
Dimensions						
Width (mm)		1885	1885	1885	1885	1885
Height (mm)		630	630	630	630	630
Depth (mm)	(Direction of airflow)	925	925	925	1850	1850

* Flow Rate – unit selection dependent on air flow rate and cooking style

ABOUT US

Purified Air Ltd. has been striving to find the best and most cost-effective way to filter and control oil, smoke, fat and odour produced by commercial kitchens and service since 1984.

Purified Air manufactures filtration and odour control products for stock and bespoke systems, supplying systems to many sectoral brands. The design of each solution is based on the type of food cooked, the cooking process used, and the extracted air volume providing tried and tested purified kitchen exhaust air for Fast Food, Casual Dining and Luxury Concept Restaurant (Fine Dining) markets. By working with these variables, we can design and supply some of the world's best commercial kitchen filtration and odour control systems.

WORLDWIDE COVERAGE

- United Kingdom
- Middle East
- Europe
- North America
- Asia
- Australasia

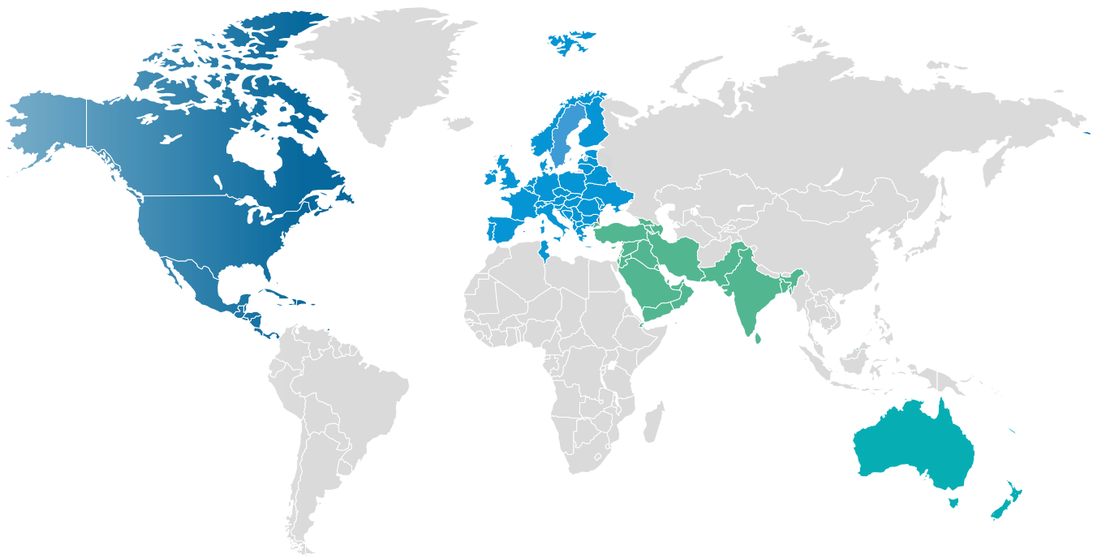

GET IN TOUCH

01708 755 414
enq@purifiedair.com
Purified Air Limited, Lyon House
Lyon Road, Romford,
Essex RM1 2BG

purifiedair.com

purifiedair®

purifiedair.com