Quotation Reference

Project Name

Welcome Break - Taco Bell Drive Thru

Prepared for: James Forster (Thornley & Lumb)

Prepared by: **Emrys Hughes**

Date: 05/06/25

Contact details:

[redacted]

AIR FILTRATION EXPERTS

UK MANUFACTURER

MARKET LEADERS SINCE 1984

CONTENTS

CONTENTS 2

INTRODUCTION 3

TECHNICAL SPECIFICATIONS (per unit) 8

TECHNICAL DRAWINGS 9

PRICING 11

INTRODUCTION

ESP

Our ESP’s have been specifically designed for kitchen extract systems; they have integral sumps to collect the oil, grease and smoke particles filtered out of the exhaust.



Key Features
Eliminates up to 98% of oil, grease, and smoke particles
Filters particles down to sub-micron levels
Produces ozone to help reduce malodours
Designed with an integral sump

How an Electrostatic Precipitator (ESP) Works

As our ESP’s have been specifically designed for kitchen extract and not modified from industrial use, they have integral sumps to collect the oil, grease and smoke particles filtered out of the exhaust; this not only simplifies servicing but eradicates potentially dangerous spillage from the bottom of the units and greatly cuts down on flammable build-ups within the duct run.

The ionisation voltage has been designed to run at a negative potential which enhances the ionisation of particles and produces more ozone which is helpful in reducing odours in kitchen applications. Our ESP units fit in-line with the kitchen ducting and can be configured modularly to cope with all extract volume requirements.

PRODUCT OVERVIEWS

Our ESP range comprises of:

- ESP 1500EI which can handle up to 0.7m3/sec of air flow volume
- ESP 3000EI which can handle up to 1.4m3/sec of air flow volume
- ESP 4500EI which can handle up to 2.1m3/sec of air flow volume
- ESP 6000EI which can handle up to 2.8m3/sec of air flow volume

Efficiency

The Electrostatic Precipitator is a very efficient means for separating the particulate phase; operating efficiency when clean can be as high as 98% at particle sizes down to 0.01 micron. However, as the plates and ioniser become laden with particles during the use the efficiency will reduce due to the insulating effect of the dirt.

Pressure Loss

The Electrostatic Precipitator does not present a high-pressure loss (175PA approx. dependant on air flow). This gives a specific advantage in that most standard Kitchen extractor fans will have the capability of overcoming this small differential.

This is particularly advantageous when it is considered that if the pressure loss were high larger noisier fans would probably be necessary resulting in potential noise pollution.

PASSIVE FILTRATION

At Purified Air we supply a range of passive filtration that can be used both in conjunction with our powered units or as standalone filters dependant on the situation.

Carbon Filters

We manufacture Site Safe Carbon Filters, these innovative carbon units measure 594x196x597mm, three combining to 594x594x597mm, directly replacing our original carbon blocks whilst providing exactly the same filter performance as an existing full size cell.

Their advantage is that they only weigh 18kg each against the 68kg of our original blocks. This takes the strain out of fitting and servicing, allowing only one engineer to complete the task where two had been previously required.

Our Site Safe Carbon Filters use panels of activated carbon to remove the malodourous gases within the commercial kitchen extract duct through the process of chemical adsorption.
By installing our ESP units before our Site Safe filters, the carbon life span is greatly increased, allowing it to nullify malodours at optimum efficiency for much longer.

The carbon filters should be sized to achieve a 0.4s dwell time.

PRODUCT OVERVIEWS

MFU

Our MFUs are designed explicitly for kitchen extract systems; they collect the oil, grease and smoke particles filtered out of the exhaust through a combination of passive air filters, including panel, bag, HEPA, and carbon.



Key Features
Multiple configurations
Modular in design
Eliminates oil, grease, smoke particles and odours
Greatly reduces grease build-up within the duct run

The high-quality unit can house multiple filter combinations and is effortlessly serviced, replaced or even re-configured to provide continually effective and affordable kitchen extract particulate control. Additionally, the units help reduce grease build-up within the ducting and reduce odours.

Its modular design means units can be configured in various ways to handle any required flow rate, providing effective and efficient kitchen extract filtration.

OUR FILTERS

Panel Filters

Our pleated panel filters are constructed using a core of pleated fibrous media designed specifically for use in air filtration. This is then thermally bonded onto a galvanised steel support mesh for maximum rigidity which is then fully bonded into a moisture resistant rigid white lined card frame. These filters are used as stand-alone pre filters or as a pre filter to bag filters filtering oil and grease particles.

Bag Filters

PRODUCT OVERVIEWS

Our general-purpose bag filters are manufactured using a galvanised steel header to retain the pocket sets.

The pockets are produced from synthetic micro-fibres specifically designed for use in air filtration. They can be applied as a pre filter to carbon cells in malodour extraction, taking out oil and grease particles ahead of the carbon filter stage.

HEPA Filters

To qualify to be called a High-Efficiency Particulate Air or HEPA filter, the filter must be able to remove from the air that passes through it, 99.97% of particles down to a sub-micron level. Our main use of HEPA filtration is the removal of smoke particles. We do supply many different sizes and grades of HEPA filters so please contact us with your requirements.

Carbon Filters

Our site safe carbon filters use panels of activated carbon to remove the malodourous gases within the commercial kitchen extract duct through the process of chemical adsorption. By installing adequate pre-filtration before our site safe filters, the carbon life span is greatly increased, allowing it to nullify malodours at optimum efficiency for much longer.

TECHNICAL SPECIFICATIONS (per unit)

1No. ESP 4500E Unit.	
Air Volume Max	2.1 m^3/s
Electrical Supply	220/240V, 50/60Hz, 1ph
Power Consumption	40 W
Weight each	118 kg
Min/Max Working Temperature	4/56°C
Max Relative Humidity	75%

2No. MFU 1800 (Casing Only)	
Width	1885 mm
Height	630 mm
Depth	925 mm
Weight	117 kg

Carbon Filter
Providing a 0.4s dwell time
18No. 594 x 196 x 597 Site Safe Carbon Filters

TECHNICAL DRAWINGS

ESP 4500

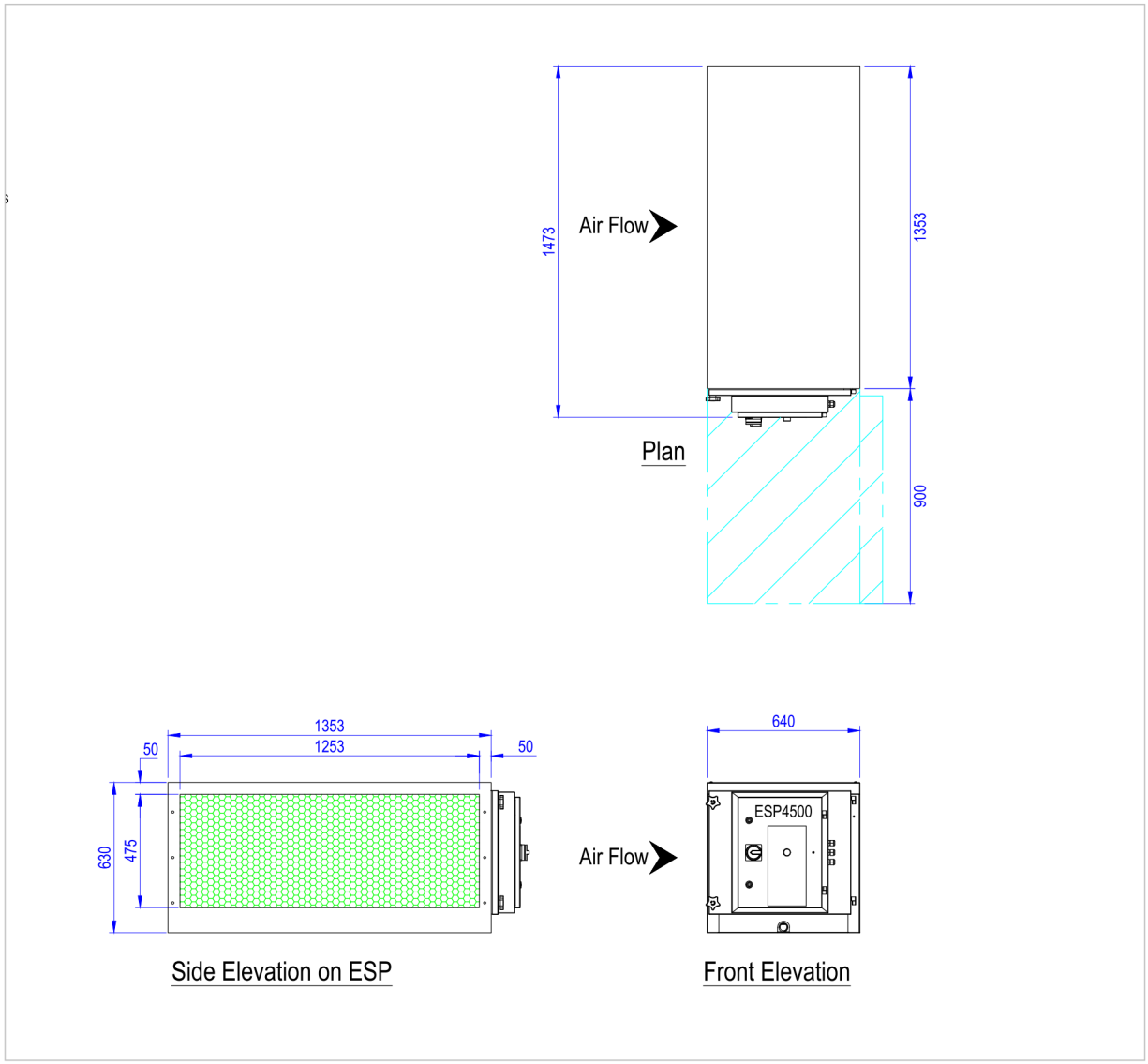

TECHNICAL DRAWINGS

MFU 1800

