This drawing is copyright & the property of Robinson and Hall LLP
& must not be copied in whole or in part without written permission.

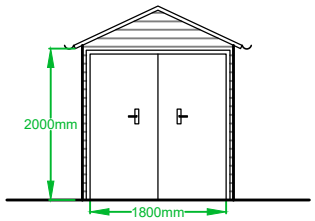


: : NORTH ELEVATION

Scale 1:100

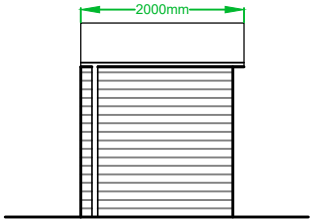


: : EAST ELEVATION

Scale 1:100

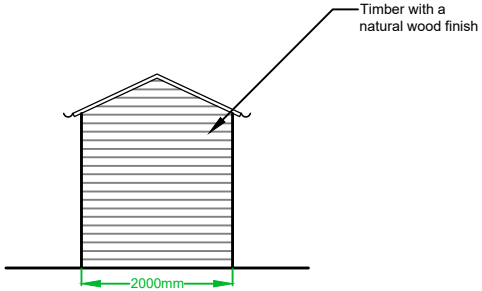


: : SOUTH ELEVATION

Scale 1:100




: : WEST ELEVATION

Scale 1:100

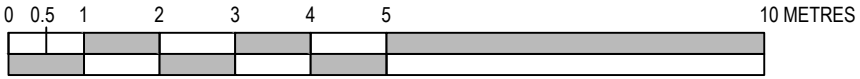


SCALE 1:100

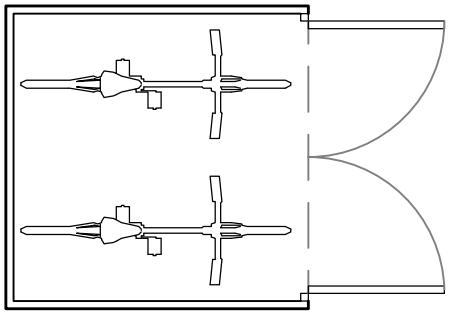

: : FLOOR PLAN

Scale 1:50

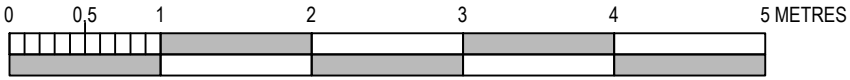


SCALE 1:50

A4 | PROPOSED BIKE STORE - SCALE 1:50 @ A4 | DRAWING | A | 55373 | 5

Drawn : XGGB
Checked : DJS
Date : NOVEMBER 2026

Project : Land adjecent,
Whitehorse Cottage,
Loop Road,
Keyston, Huntingdon,
Cambridgeshire, PE28 0RE

Land & Property Professionals
Bedford Buckingham
robinsonandhall.co.uk