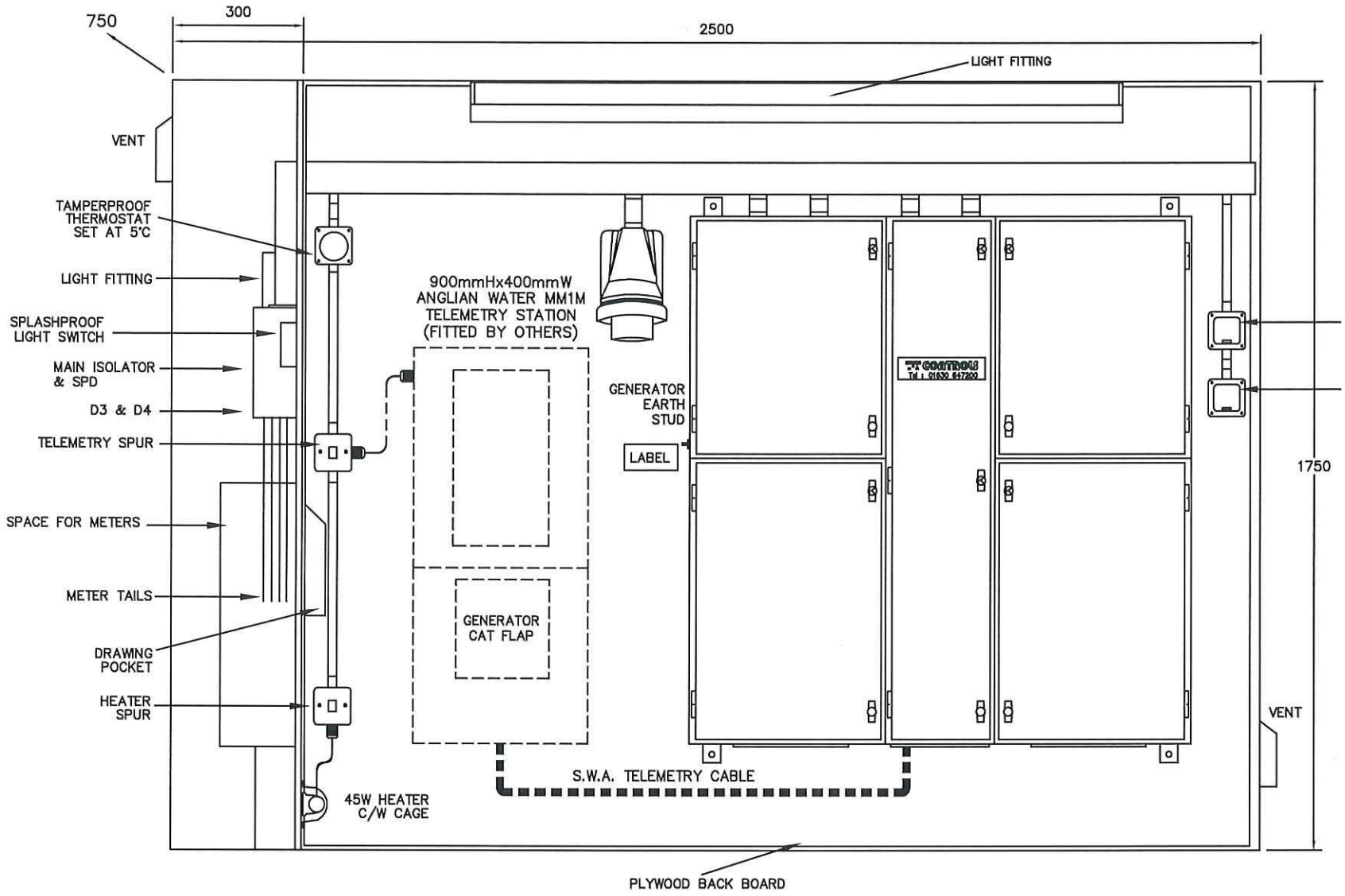

NOTES:
INCOMING PSTN B.T. LINE TO BE FITTED WITH LIGHTNING PROTECTION (SUPPLIED LOOSE)

LABEL INSCRIPTION
BOLTED EARTH CONNECTION MUST BE MADE BEFORE GENERATOR IS CONNECTED WITH MAIN PLUG & SOCKET

D3 – DANGER 400V – ISOLATE SUPPLY ELSEWHERE BEFORE OPENING

D4 – SPD
SYSTEM PROTECTED WITH ARRESTORS, DURING INSULATION TESTING REMOVE PLUG–IN UNIT.

KIOSK LAYOUT
(SHOWN WITH DOORS REMOVED)
SIZE 1750H X 2500W X 750DP
MATERIAL – G.R.P.
TYPE – DOUBLE DOOR
COLOUR – DARK GREEN BS4800 REF. 14C39

REV	AMMENDMENT	DATE	DRWN.	APP.

REVISION TABLE

TITLE: DUAL ASD PUMP CONTROL PANEL TO DCG & ANGLIAN WATER SPEC

CLIENT: LINDUM GROUP

SCHEME: RAF UPWOOD

T-T Controls & Automation
Onneley Works, Newcastle Road, Woore, Cheshire, CW3 9RU
A DIVISION OF T-T PUMPS LTD.
© COPYRIGHT T-T PUMPS LTD 2022

[redacted]
www.ttpumps.com

PROJECT NO. C6509

DRAWN BY [redacted]
APPROVED BY
DATE: 25/08/22

DRAWING NO. A4/E/10087

SHEET NO. 1 of 11

TT057 03.21

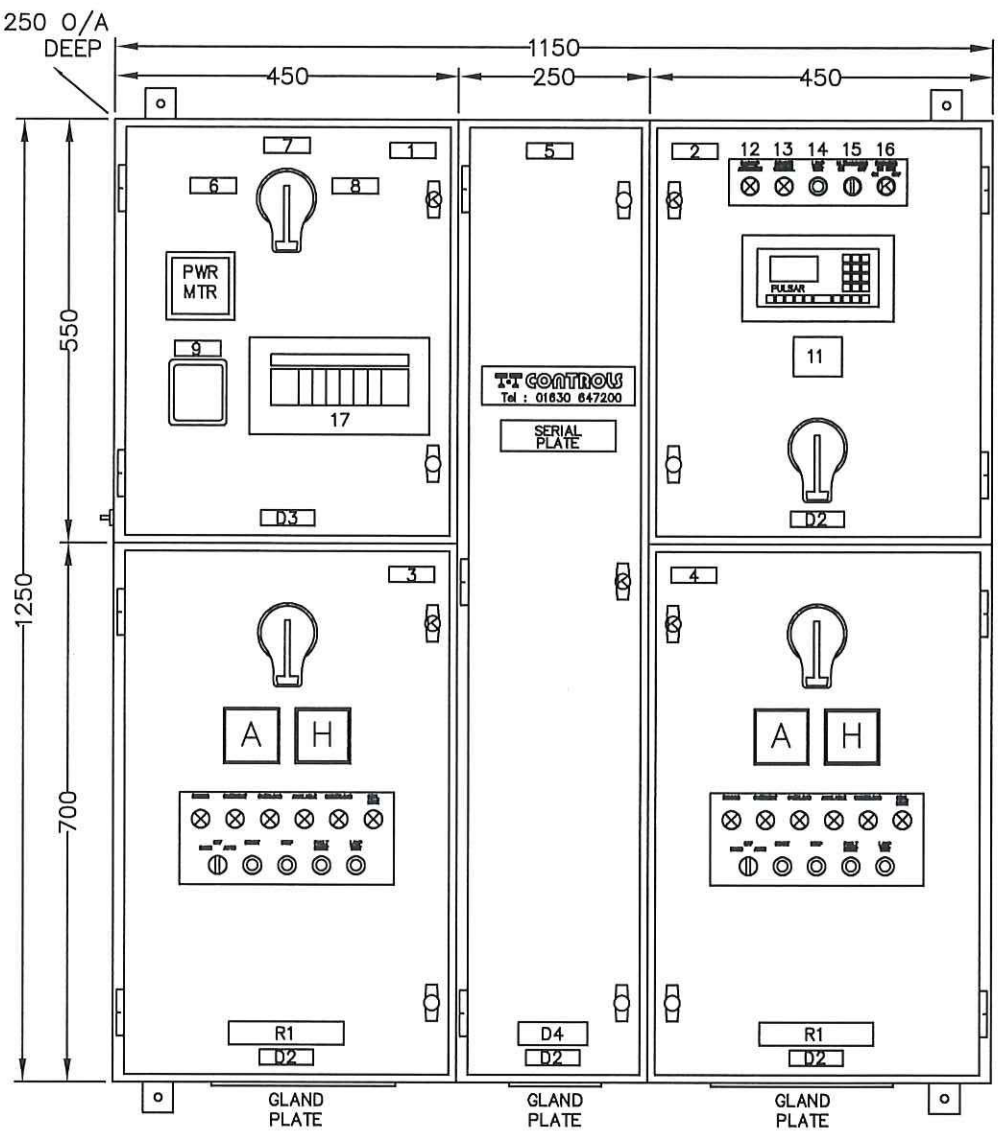

CONTROL PANEL DOOR LAYOUT

PAINT FINISH : ENCLOSURE RAL7035
PAINT FINISH : BACK PLATES WHITE FULL GLOSS
IP RATING : IP54 (RECOMMENDED FOR INDOOR USE)

LABELS

REF	DESCRIPTION
	6MM LETTERS
1	INCOMER
2	CONTROL & TELEMETRY MARSHALLING
3	PUMP 1
4	PUMP 2
5	CABLEWAY
	4MM LETTERS
6	MAINS
7	OFF
8	GENERATOR
9	230 V SOCKET
10	RUNNING OVERHEAT OVERLOAD AVAILABLE UNDERLOAD SEAL LEAK OFF HAND AUTO START STOP FAULT RESET LAMP TEST
11	ULTRASONIC RELAYS
12	BACKUP ACTIVATED
13	REMOTE CONTROL
14	LAMP TEST
15	ULTRASONICS ON/OFF
16	ENGINEER ON SITE – ON/OFF
17	DISTRIBUTION BOARD
	6MM LETTERS
R1	PUMP RATING LABEL
D1	⚠ DANGER 230V
D2	⚠ DANGER 400V
D3	⚠ DANGER 400V – ISOLATE SUPPLY ELSEWHERE BEFORE OPENING
D4	SYSTEM PROTECTED WITH ARRESTORS, DURING INSULATION TESTING REMOVE PLUG–IN UNIT.

RL1	PUMP INHIBIT	M
RL2	PUMP 1 CALLED	
RL3	PUMP 2 CALLED	
RL4		M
RL5	U/S FAIL (N/E)	
	COMMON STOP LEVEL	M
	DUTY START LEVEL	M
	STANDBY START LEVEL	M

REV	AMMENDMENT	DATE	DRWN.	APP.
REVISION TABLE				

TITLE: DUAL ASD PUMP CONTROL PANEL TO DCG & ANGLIAN WATER SPEC

CLIENT: LINDUM GROUP

SCHEME: RAF UPWOOD

T-T Controls & Automation
Onneley Works, Newcastle Road, Woore, Cheshire, CW3 9RU
A DIVISION OF T-T PUMPS LTD.
© COPYRIGHT T-T PUMPS LTD 2022

[redacted]
www.ttpumps.com

PROJECT NO. C6509

DRAWN BY [redacted]
APPROVED BY
DATE: 25/08/22
DRAWING NO. A4/E/10087
SHEET NO. 2 of 11

TT057 03.21

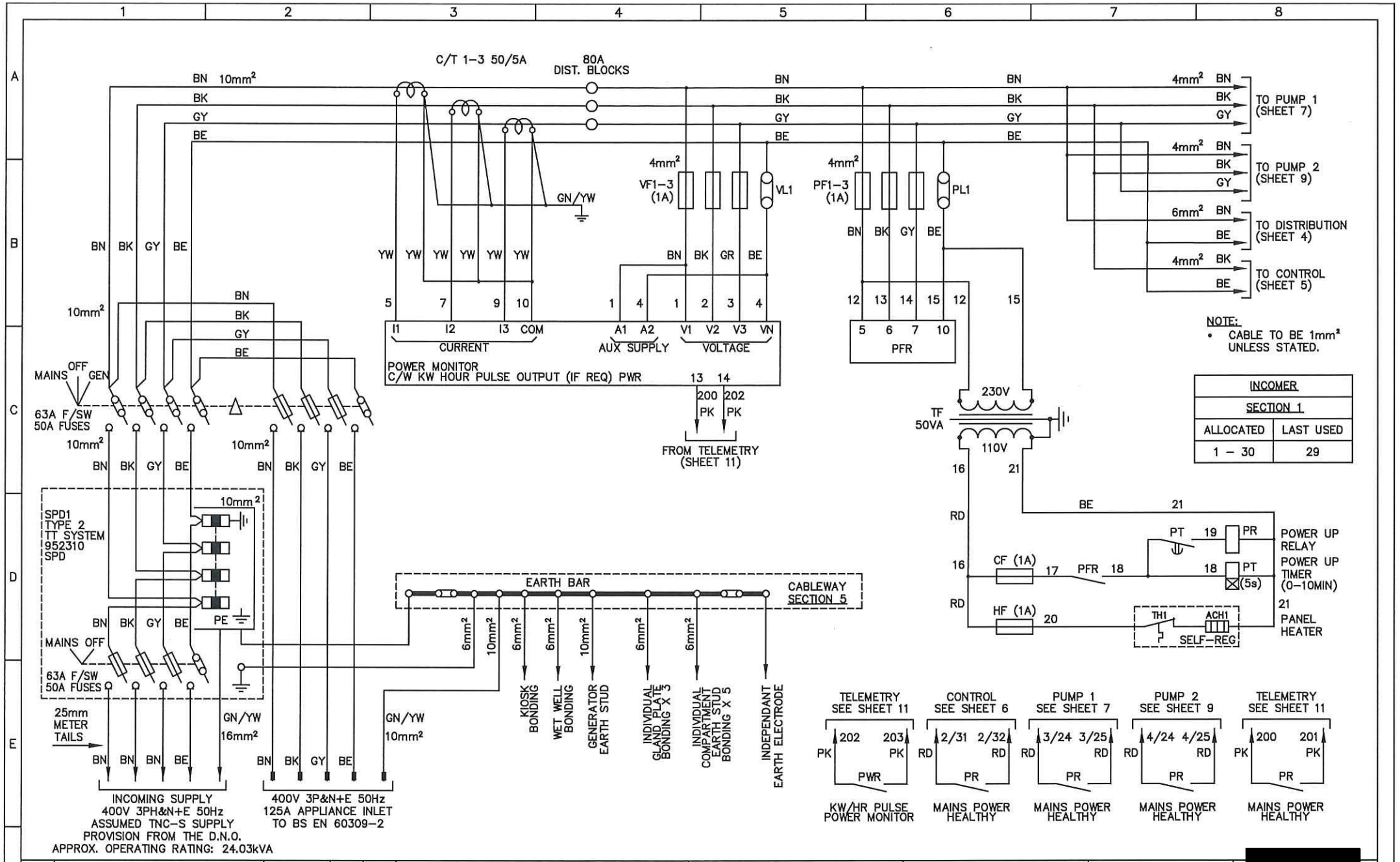

REV	AMMENDMENT	DATE	DRWN.	APP.

REVISION TABLE

TITLE: DUAL ASD PUMP CONTROL PANEL TO DCG & ANGLIAN WATER SPEC

CLIENT: LINDUM GROUP

SCHEME: RAF UPWOOD

T-T Controls & Automation

Onneley Works, Newcastle Road, Woore, Cheshire, CW3 9RU

[redacted]

www.ttpumps.com

A DIVISION OF T-T PUMPS LTD.

© COPYRIGHT T-T PUMPS LTD 2022

PROJECT NO. C6509

DRAWN BY [redacted]

APPROVED BY

DATE: 25/08/22

DRAWING NO. A4/E/10087

SHEET NO. 3 of 11

TT057 03.21

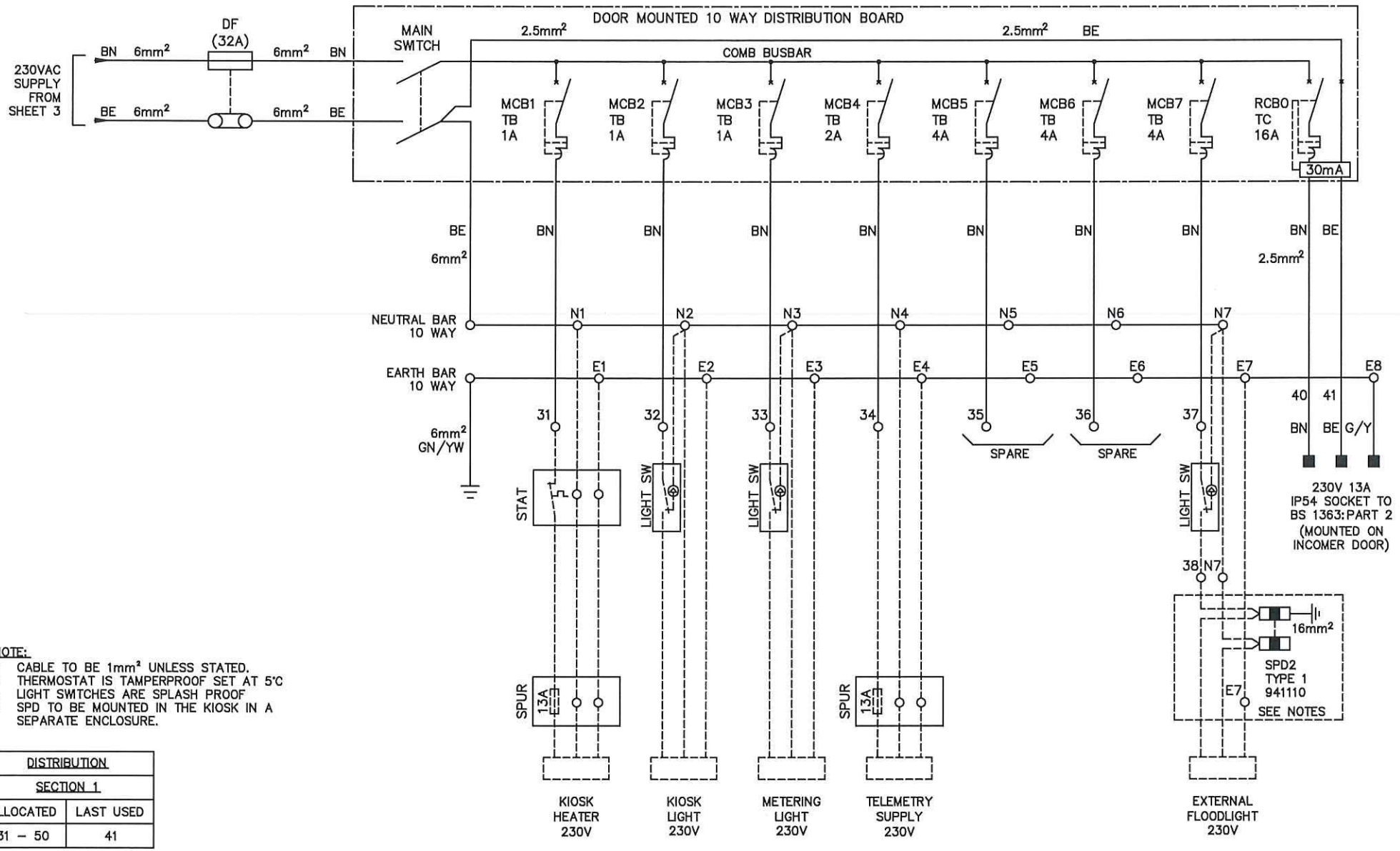

NOTE:
- CABLE TO BE 1mm² UNLESS STATED.
- THERMOSTAT IS TAMPERPROOF SET AT 5°C
- LIGHT SWITCHES ARE SPLASH PROOF
- SPD TO BE MOUNTED IN THE KIOSK IN A SEPARATE ENCLOSURE.

DISTRIBUTION	
SECTION 1	
ALLOCATED	LAST USED
31 – 50	41

REV	AMMENDMENT	DATE	DRWN.	APP.

REVISION TABLE

TITLE: DUAL ASD PUMP CONTROL PANEL TO DCG & ANGLIAN WATER SPEC

CLIENT: LINDUM GROUP

SCHEME: RAF UPWOOD

T-T Controls & Automation
Onneley Works, Newcastle Road, Woore, Cheshire, CW3 9RU
A DIVISION OF T-T PUMPS LTD.
© COPYRIGHT T-T PUMPS LTD 2022

[redacted]
www.ttpumps.com

PROJECT NO. C6509

DRAWN BY [redacted]
APPROVED BY
DATE: 25/08/22
DRAWING NO. A4/E/10087
SHEET NO. 4 of 11

TT057 03.21

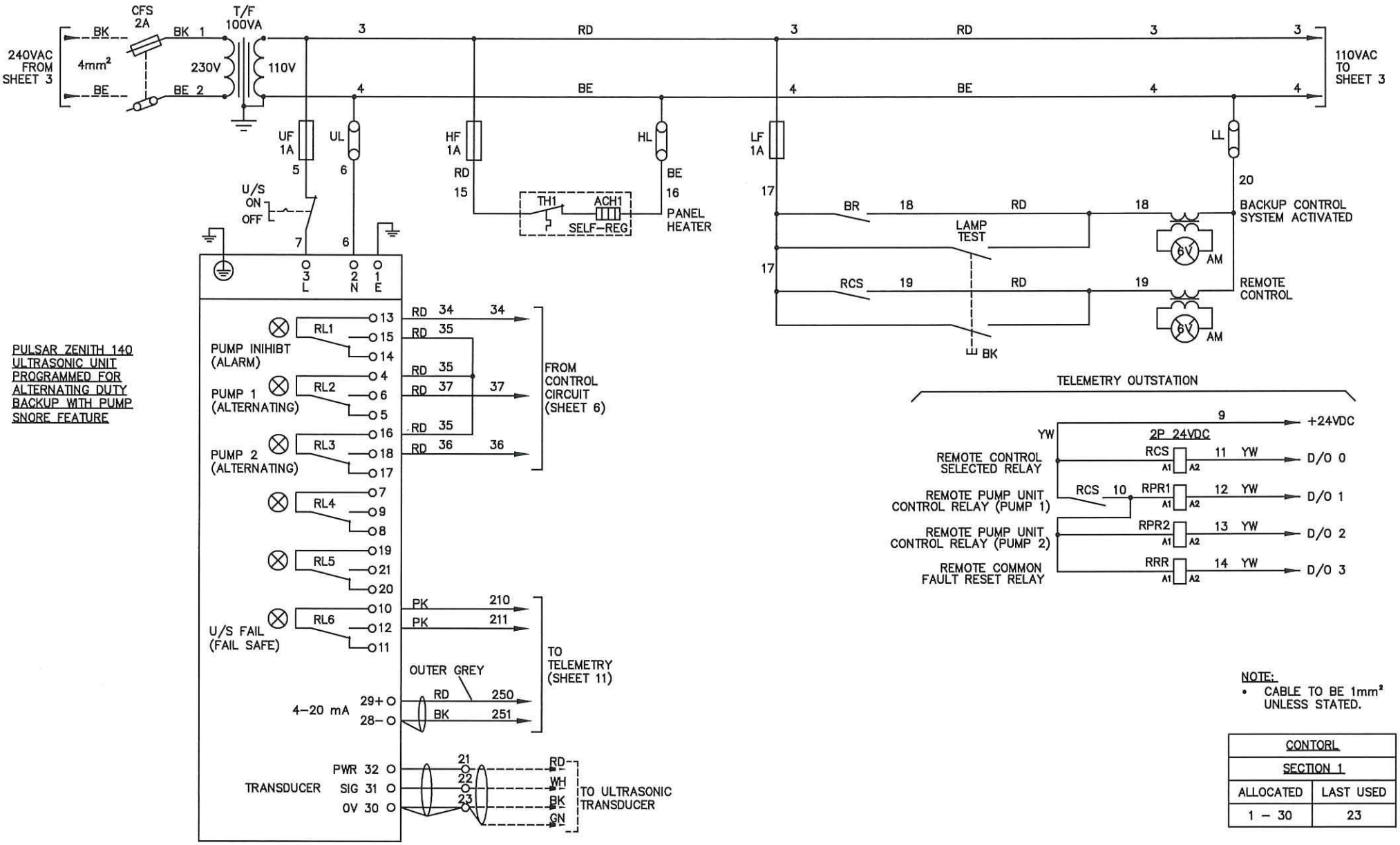

NOTE:
- CABLE TO BE 1mm² UNLESS STATED.

CONTORL	
SECTION 1	
ALLOCATED	LAST USED
1 – 30	23

REV	AMMENDMENT	DATE	DRWN.	APP.
REVISION TABLE				

TITLE: DUAL ASD PUMP CONTROL PANEL TO DCG & ANGLIAN WATER SPEC

CLIENT: LINDUM GROUP

SCHEME: RAF UPWOOD

T-T Controls & Automation
Onneley Works, Newcastle Road, Woore, Cheshire, CW3 9RU
A DIVISION OF T-T PUMPS LTD.
© COPYRIGHT T-T PUMPS LTD 2022

[redacted]
www.ttpumps.com

PROJECT NO. C6509

DRAWN BY [redacted]
APPROVED BY
DATE: 25/08/22
DRAWING NO. A4/E/10087
SHEET NO. 5 of 11

TT057 03.21

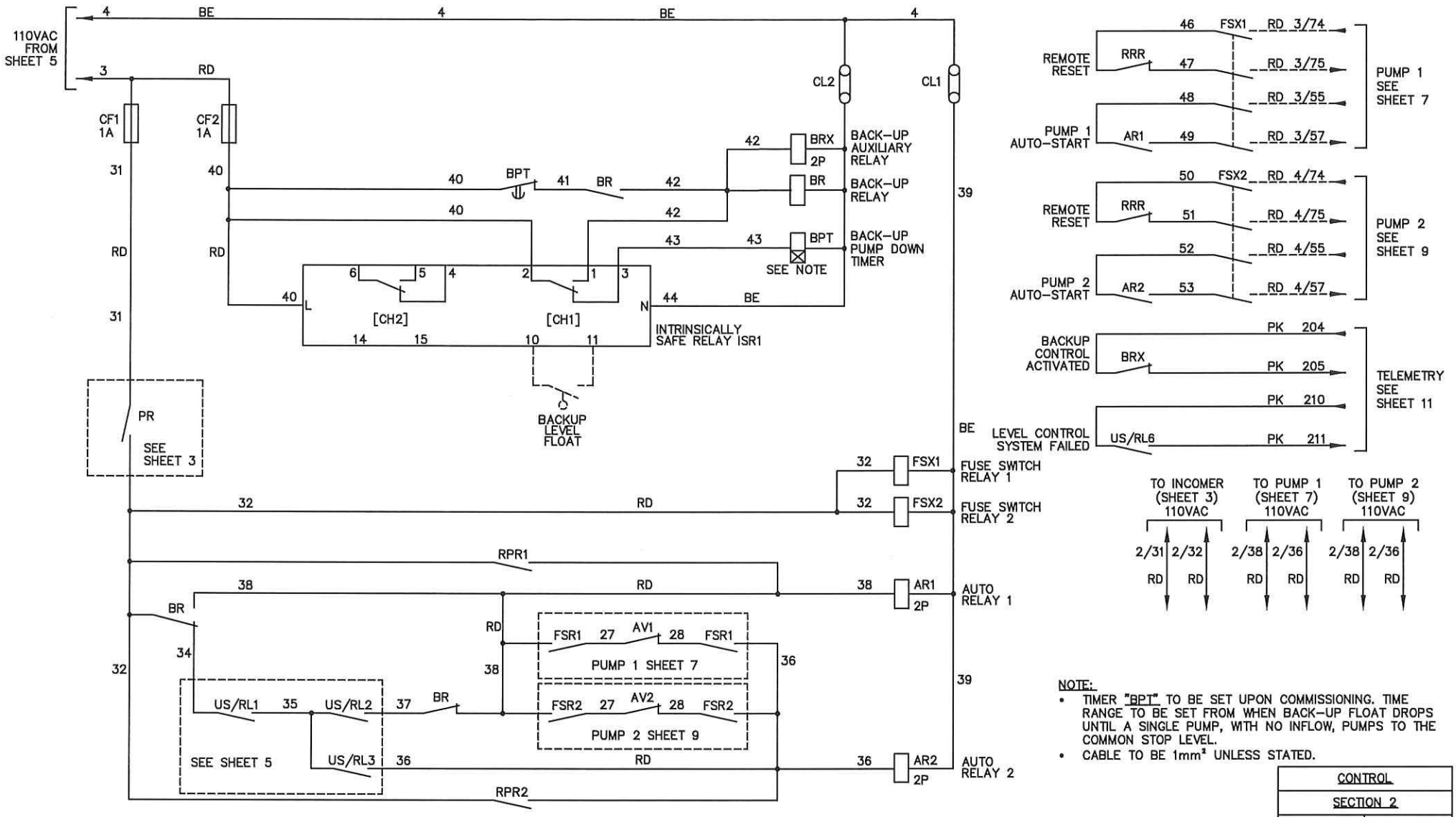

NOTE:

- TIMER "BPT" TO BE SET UPON COMMISSIONING. TIME RANGE TO BE SET FROM WHEN BACK-UP FLOAT DROPS UNTIL A SINGLE PUMP, WITH NO INFLOW, PUMPS TO THE COMMON STOP LEVEL.
- CABLE TO BE 1mm² UNLESS STATED.

CONTROL	
SECTION 2	
ALLOCATED	LAST USED
31 – 60	53

REV	AMMENDMENT	DATE	DRWN.	APP.
REVISION TABLE				

TITLE: DUAL ASD PUMP CONTROL PANEL TO DCG & ANGLIAN WATER SPEC

CLIENT: LINDUM GROUP

SCHEME: RAF UPWOOD

T-T Controls & Automation
Onneley Works, Newcastle Road, Woore, Cheshire, CW3 9RU
A DIVISION OF T-T PUMPS LTD.
© COPYRIGHT T-T PUMPS LTD 2022

[redacted]
www.ttpumps.com

PROJECT NO. C6509

DRAWN BY [redacted]
APPROVED BY
DATE: 25/08/22
DRAWING NO. A4/E/10087
SHEET NO. 6 of 11

TT057 03.21

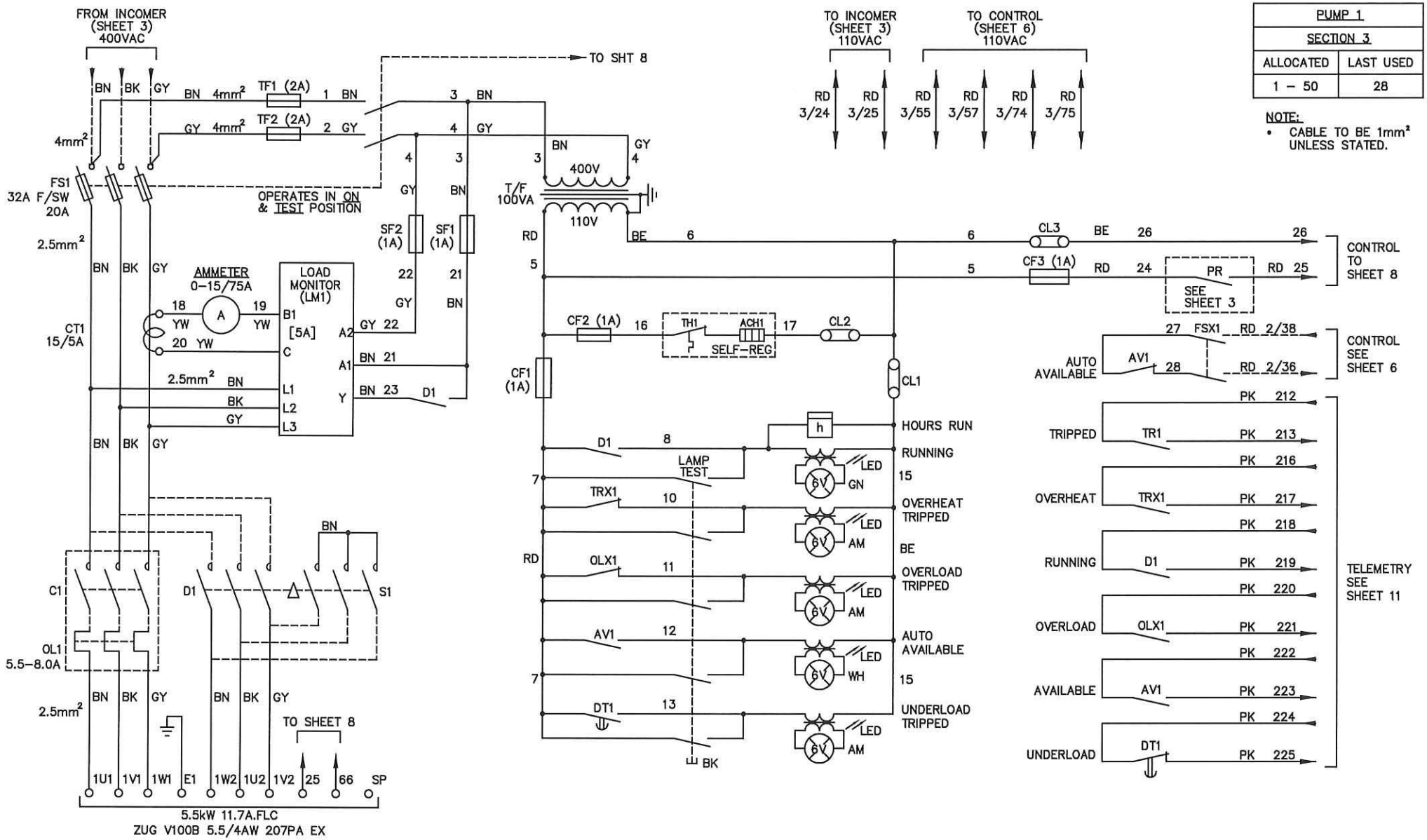

REV	AMMENDMENT	DATE	DRWN.	APP.
	REVISION TABLE			

TITLE: DUAL ASD PUMP CONTROL PANEL TO DCG & ANGLIAN WATER SPEC

CLIENT: LINDUM GROUP

SCHEME: RAF UPWOOD

T-T Controls & Automation
Onneley Works, Newcastle Road, Woore, Cheshire, CW3 9RU
A DIVISION OF T-T PUMPS LTD.
© COPYRIGHT T-T PUMPS LTD 2022

[redacted]
www.ttpumps.com

PROJECT NO. C6509

DRAWN BY [redacted]

APPROVED BY

DATE: 25/08/22

DRAWING NO. A4/E/10087

SHEET NO. 7 of 11

TT057 03.21

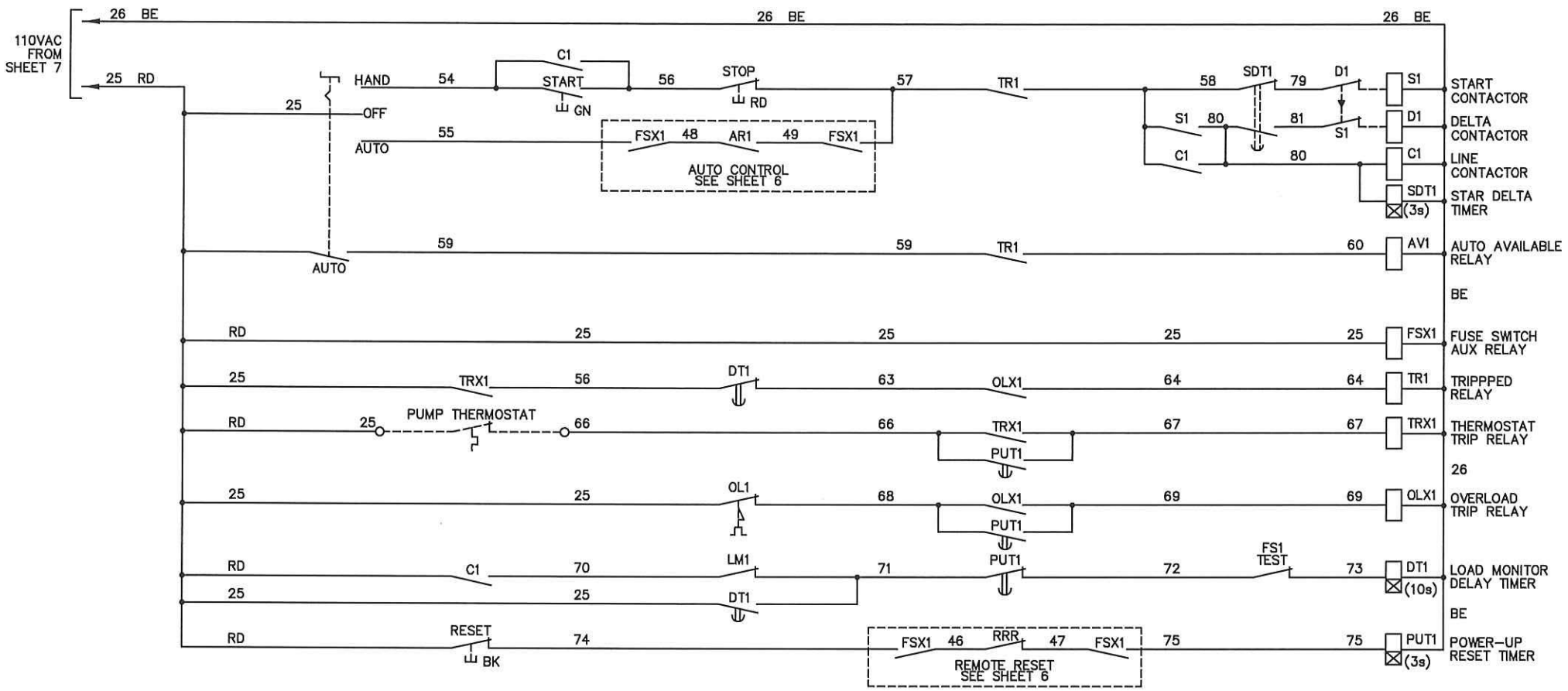

NOTE:
- CABLE TO BE 1mm² UNLESS STATED.

PUMP 1	
SECTION 3	
ALLOCATED	LAST USED
51 – 100	81

REV	AMMENDMENT	DATE	DRWN.	APP.
	REVISION TABLE			

TITLE: DUAL ASD PUMP CONTROL PANEL TO DCG & ANGLIAN WATER SPEC

CLIENT: LINDUM GROUP

SCHEME: RAF UPWOOD

T-T Controls & Automation
Onneley Works, Newcastle Road, Woore, Cheshire, CW3 9RU
A DIVISION OF T-T PUMPS LTD.
© COPYRIGHT T-T PUMPS LTD 2022

[redacted]
www.ttpumps.com

PROJECT NO. C6509

DRAWN BY [redacted]

APPROVED BY

DATE: 25/08/22

DRAWING NO. A4/E/10087

SHEET NO. 8 of 11

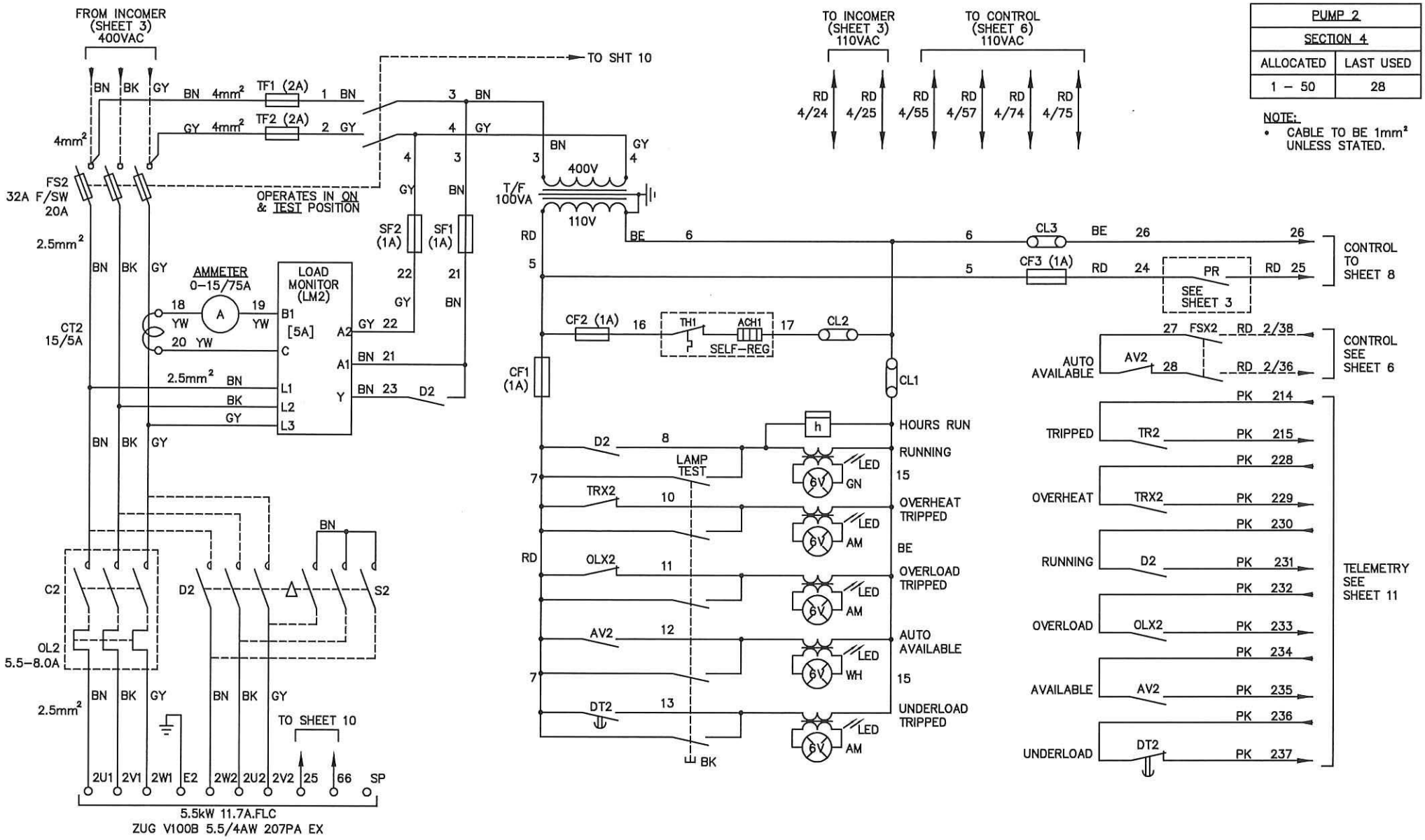

REV	AMMENDMENT	DATE	DRWN.	APP.
	REVISION TABLE			

TITLE: DUAL ASD PUMP CONTROL PANEL TO DCG & ANGLIAN WATER SPEC

CLIENT: LINDUM GROUP

SCHEME: RAF UPWOOD

T-T Controls & Automation

Onneley Works, Newcastle Road, Woore, Cheshire, CW3 9RU

A DIVISION OF T-T PUMPS LTD.

© COPYRIGHT T-T PUMPS LTD 2022

[redacted]

www.ttpumps.com

PROJECT NO. C6509

DRAWN BY [redacted]

APPROVED BY

DATE: 25/08/22

DRAWING NO. A4/E/10087

SHEET NO. 9 of 11

TT057 03.21

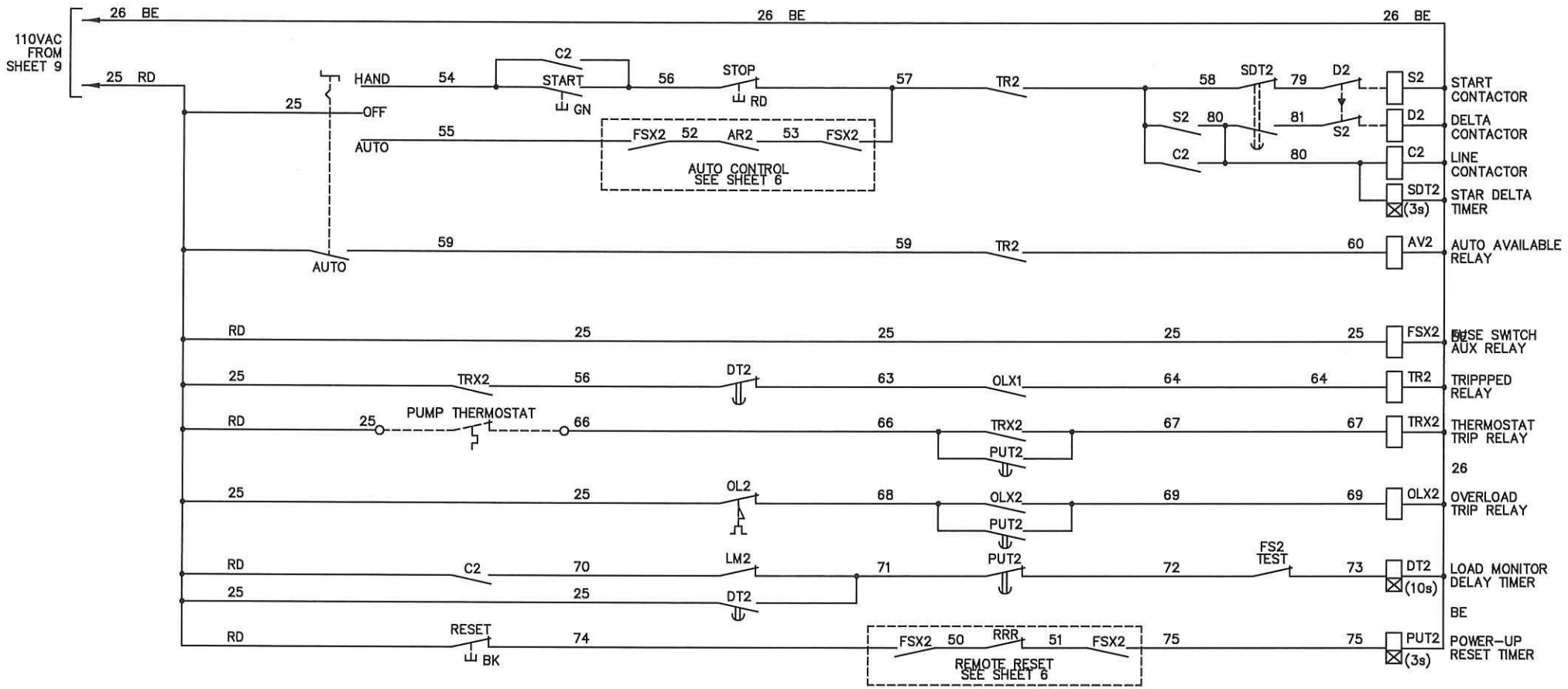

NOTE:
- CABLE TO BE 1mm² UNLESS STATED.

PUMP 2	
SECTION 4	
ALLOCATED	LAST USED
51 – 100	81

REV	AMMENDMENT	DATE	DRWN.	APP.
	REVISION TABLE			

TITLE: DUAL ASD PUMP CONTROL PANEL TO DCG & ANGLIAN WATER SPEC

CLIENT: LINDUM GROUP

SCHEME: RAF UPWOOD

T-T Controls & Automation
Onneley Works, Newcastle Road, Woore, Cheshire, CW3 9RU
A DIVISION OF T-T PUMPS LTD.
© COPYRIGHT T-T PUMPS LTD 2022

[redacted]
www.ttpumps.com

PROJECT NO. C6509

DRAWN BY [redacted]
APPROVED BY
DATE: 25/08/22
DRAWING NO. A4/E/10087
SHEET NO. 10 of 11

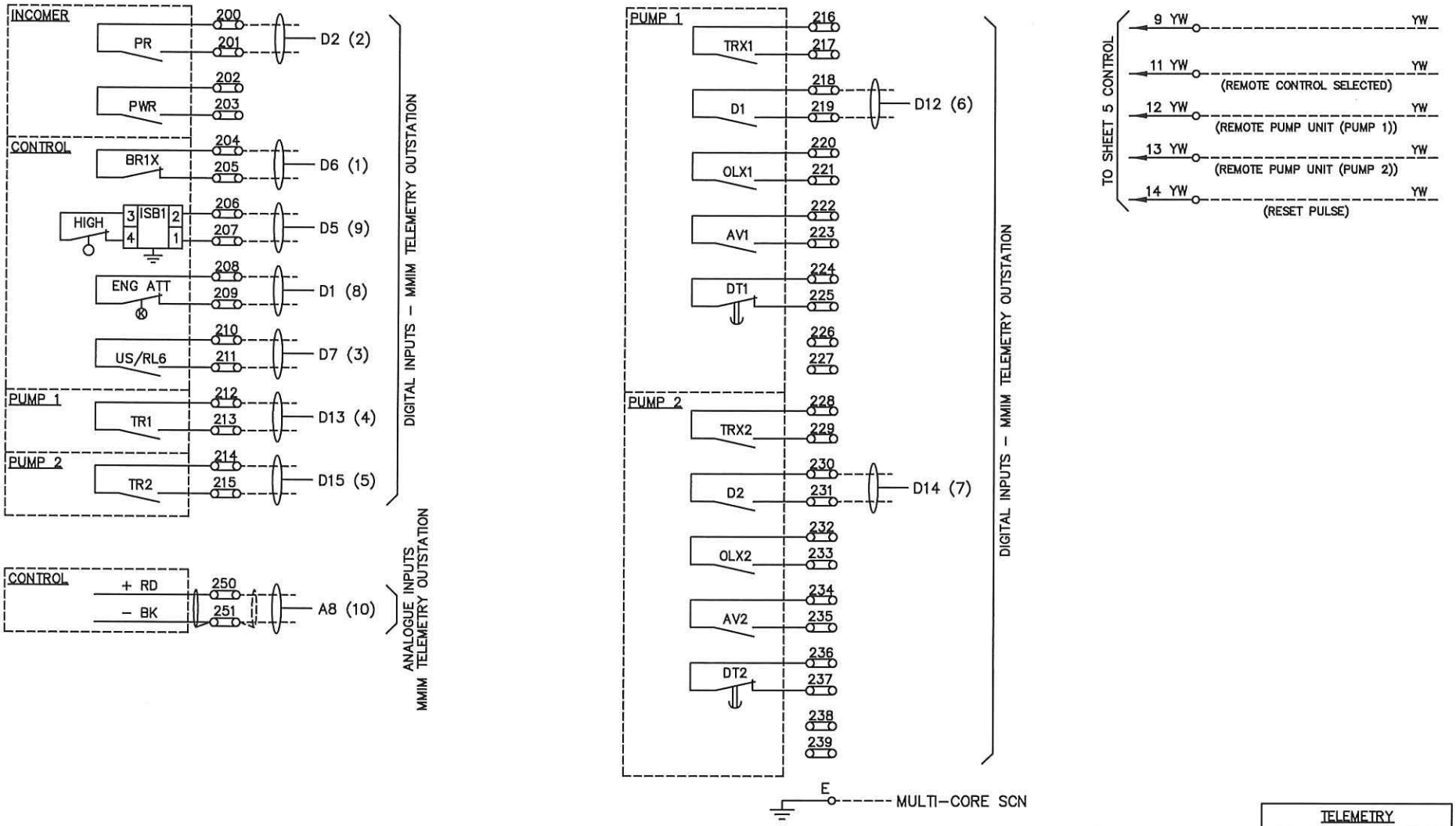

NOTE:
- CABLE TO BE 1mm² UNLESS STATED.
- ALL TELEMETRY TO BE PINK
- ALL RELAY CONTACTS ARE FAILSAFE – NORMALLY ENERGISED.
- IN HEALTHY STATE THE CONTACTS ARE CLOSED & OPEN IN FAILED STATE

10 MULTI–TWISTED PAIRS CABLE WITH INDIVIDUAL PAIR SCREENED & COLLECTIVE SCREENED 16/0.2MM TO BS5308 PART 1

TELEMETRY	
SECTION 2	
ALLOCATED	LAST USED
200 – 300	253

REV	AMMENDMENT	DATE	DRWN.	APP.

REVISION TABLE

TITLE: DUAL ASD PUMP CONTROL PANEL TO DCG & ANGLIAN WATER SPEC

CLIENT: LINDUM GROUP

SCHEME: RAF UPWOOD

T-T Controls & Automation
Onneley Works, Newcastle Road, Woore, Cheshire, CW3 9RU
A DIVISION OF T-T PUMPS LTD.
© COPYRIGHT T-T PUMPS LTD 2022

[redacted]
www.ttpumps.com

PROJECT NO. C6509

DRAWN BY [redacted]
APPROVED BY
DATE: 25/08/22

DRAWING NO. A4/E/10087

SHEET NO. 11 of 11

TT057 03.21