

Specification guide

for energy efficient windows and doors

Liniar

“Fusing industry experience with innovation, sustainability and loyalty.”

Front page image
White bay and casement windows
Bellway Homes





Cream casement windows
Dean Mason Builders/Self Build

Contents

Why PVCu windows 7
Specifying Liniar 11
More reasons to specify Liniar 13
About Liniar 14
Fully accredited 15
Thermal efficiency vs. reinforcement 16
Patented bubble gasket 17
Enhanced performance 17
Fully tested and compliant 18
Approved fabricators 18
Recycling and sustainability 19
The Liniar product range 20

70mm system

Overview and case study 22
Window and door configurations 24
Casement window 26
EnergyPlus casement window 28
Tilt & turn window 30
Flush sash window 32
Pivot window 34
Residential door 36
Composite door 38
French door 40
Window & door product chart 42

ModLok™ Patio door

Overview and case study 46
ModLok™ Patio door configurations 48
ModLok™ Patio door 50
ModLok™ Patio door product chart 52

Bi-fold door

Overview and case study 54
Bi-fold door configurations 56
Standard Bi-fold door 58
ModLok™ Bi-fold door 60
Bi-fold door product chart 62

Ancillaries

Overview 64
Cills and associated items 65
Structural couplings 66

Technical information

Maximum sizes 71
Wind loading 73
CE marking 73
Thermal efficiency 74
Survey and installation 74
Fire safety 76
Condensation 76
Wheelchair compliance 77
Ventilation 77
Hardware 79
Installer support 79
Liniar 10 year guarantee 80
Specifier's centre 80

Case Studies

Large scale social housing project 82
Eco friendly new build development 84
New build care home and bungalows 86

Notes 88

BSF/004

Why PVCu windows?

uPVC (unplasticised PolyVinyl Chloride) was the term used in Britain before the name was changed to PVCu in the late 1980s to fall in line with the rest of Europe. It's called PVCu on the continent because most European languages place the noun (the word PVC in this case) before the adjective (U).

1. Thermal efficiency



It's well known that PVCu is a low conductor of heat, helping to retain warmth within a building and keep the cold out. This is further enhanced by designing multiple chambers inside the window profiles, allowing them to trap air and create a thermal barrier.

Add double or triple glazing to a PVCu frame, and U-values as low as 0.8 W/m²K can be achieved.

According to the British Fenestration Rating Council (BFRC), when it comes to 'A' rated windows, PVCu outperforms any other material, with 10 times more PVCu windows achieving an 'A' rating compared to the nearest alternative.

2. Benefit vs. cost

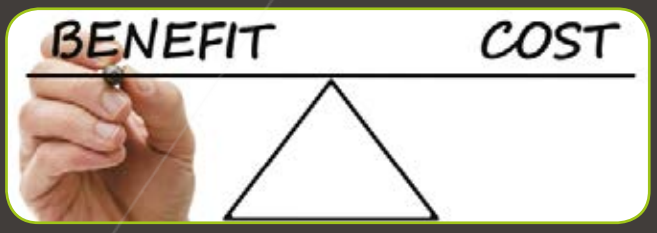

There are three distinct areas where installing PVCu windows saves on cost and adds benefit:

- Lower purchase price and installation costs
- Higher energy savings over the life of the windows, and
- Lower maintenance costs.

According to the Glass & Glazing Federation's Energy Saving Calculator, if single glazed windows of an alternative material are replaced by 'A' rated PVCu double-glazed windows, annual savings would be achieved.

3. Low maintenance



With PVCu, the ongoing maintenance consists of a wipe down with warm soapy water, making them simpler and more cost effective to look after. Woodgrain or foiled windows with minor scratches can be repaired using a RAL-matched pen.

Contrast this with timber windows – they need treating or painting on a regular basis, which is time consuming and can be costly. Aluminium windows can fade and oxidise when exposed to the sun, often requiring the use of specialist cleaners and coatings to restore.

4. Durable



PVCu windows have an expected life span of up to 35 years.

Frames will not rot, corrode, warp or split, and special additives make them tough enough to suit European requirements. In addition, the lightweight nature of a PVCu frame makes it easier to handle and install, reducing time on site for fitters and contractors.

5. Attractive



The old chunky white PVCu frames seen in the 1980s are well and truly in the past.

With a wide range of woodgrain effects and colours, as well as slim sightlines, PVCu windows can be as aesthetically pleasing as their timber or aluminium counterparts.

Designs have advanced to the extent that sashes can sit flush in the frame, mirroring a pre-1932 style timber frame – ideal for conservation properties where timber is preferred, or alternatively to offer a sleek, contemporary appearance.

6. Weather proof



PVCu windows are ideal for the damp British weather. The frames will not swell or rot, and co-extruded gaskets provide excellent resistance to air and water.

With both timber and aluminium frames, the seals are added in afterwards. Joints can also shrink back over time, causing gaps in the seals.

With PVCu, the gaskets are welded together as part of the manufacturing process, providing a continuous seal all the way round and eliminating draughts for longer.

7. Eco friendly



It's often believed that PVCu windows are not environmentally friendly.

In fact, the case can be argued for quite the opposite.

- PVCu windows can be made from 100% lead-free materials, better for both family living and for the environment.
- PVCu windows use less energy to produce in the factory, in comparison to both aluminium and timber windows.
- The ongoing energy savings are higher, with more PVCu windows achieving BFRC 'A' ratings than other materials.
- A PVCu window is 100% recyclable and can be recycled up to 10 times, giving each window an estimated life span of 350 years – far more eco-friendly than depleting timber sources.





Black arched casement windows
Burscough Wharf



White casement windows with
Georgian bars
University of Chichester

Specifying Liniar

Our mission is to be recognised as a leading force for quality and excellence in product development - fusing industry experience with innovation, sustainability and loyalty.

Ideal for 21st century developments

One of the newest and most technically advanced window systems on the market, the Liniar system was launched in 2008 by bringing together some of the window industry's most experienced and forward thinking designers and a technical team with over 500 years of industry experience between them.

With a focus on research, development, design and testing, Liniar continues to push the boundaries when it comes to product innovation.

British made

Liniar's 100% lead-free PVCu profile is made in the heart of the UK, its award-winning extrusion facility in Derbyshire boasting the largest mixing plant in Europe.

Continued investment in the factory, facilities and research and development keeps Liniar at the forefront of innovation.



Thermally efficient

Whether double or triple glazed, Liniar windows outperform other leading brands in the UK, thanks to its innovative multi-chambered profile design.

The Liniar EnergyPlus window can achieve an incredible U-value of 0.8 W/m²K when manufactured with triple glazing - achieving Passivhaus standard and creating a carbon neutral dwelling.

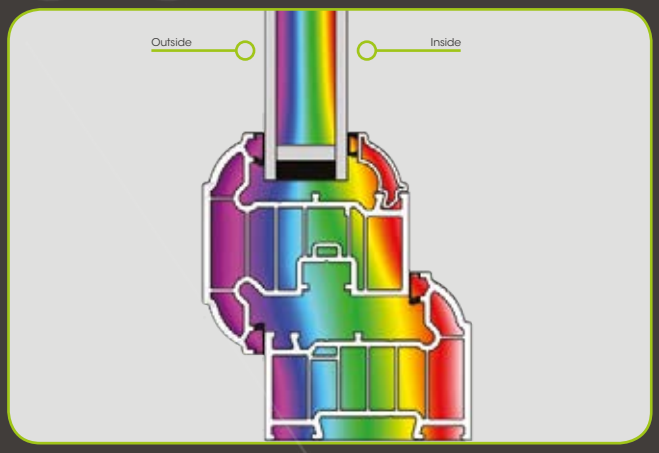

Research and development

The team's knowledge and experience have ensured they designed out the challenges and pitfalls that earlier window systems experienced.

Liniar's patented co-extruded bubble gasket, glazing platforms and screw retainer combine to make the Liniar range easier to fabricate as well as being more fitter-friendly – making it the cost-effective choice of system for large developments.



Why specify Liniar?

The Liniar range has been designed to meet the demanding requirements of today's construction market.

Reducing installation time whilst increasing energy efficiency, the Liniar system continues to lead the way - beating legislative requirements and building regulations well in advance of due dates.

The Liniar range of casement windows, French windows, tilt and turn windows and pivot windows; along with residential doors, French doors, bi-folding doors, patio doors, and composite doors are suitable for installation into low-rise and high-rise applications, new-build developments and refurbishment projects.

White fire exit casement windows
The Anchorage, Liverpool





Technically advanced

Constant product innovation means customer feedback can regularly be incorporated, leading to the one of the most technically advanced window and door systems available on the market.

A 3D printer is used to create a prototype for each new product, enabling enhancements to be made at the design stage.

More reasons to specify **Liniar**

1

British made

Liniar profiles are extruded in Derbyshire at the HL Plastics manufacturing plant, which features the largest PVCu mixing plant in Europe. Continued investment in the factory and facilities keeps Liniar at the forefront of innovation.

2

Comprehensive colour range

Liniar's coloured foils give the appearance of woodgrain and won't peel or scratch off - and the whole Liniar range is available in a wide choice of colours with an easy clean, low maintenance finish.

3

Designed by experts

The Liniar range is designed, manufactured and supported by a forward-thinking team with over 500 years' experience within the window industry.

4

Fully tested

Not only does Liniar carry out weather testing and security testing, it has invested in a robot for cyclic testing - giving peace of mind that Liniar products will endure the rigours of daily living.

5

More thermally efficient

Liniar's revolutionary profiles are far more thermally efficient than traditional PVCu window profiles. By removing unnecessary steel reinforcement, instead developing the latest in multi-chambered profile technology.

6

Strong and secure

Liniar windows and doors are tested to the latest security standards; PAS 24:2012 enhanced security performance was passed with flying colours. Built-in security features mean that Liniar frames hold Secured by Design status.

7

Most cost-effective

The reduction in steel results in a more cost effective window at the fabrication stage. Fitter-friendly features also reduce installation times and the occupant also benefits with systems capable of A+ and a U-value as low as 0.8.

8

Less frame, more glass

Ultra-slim sightlines designed into Liniar products allow in maximum natural light - and result in more attractive windows and doors.

9

Better for the environment

Liniar frames have always been 100% lead-free, well in advance of legislation. Furthermore, all elements of a Liniar window are fully and easily recyclable at the end of its life.

10

Guaranteed

Liniar profiles come with a 10 year guarantee against cracking, warping and discolouration.

For more information visit the Specifier's Centre at **www.liniar.co.uk/specifiers**

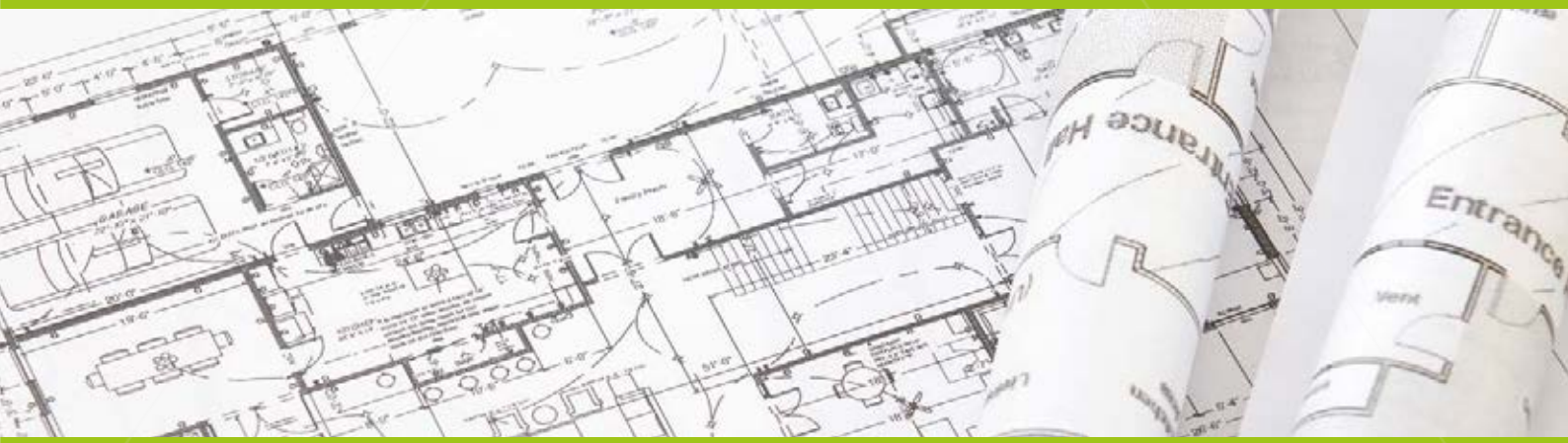

About Liniar

With a focus on research, development and design, Liniar continues to push the boundaries when it comes to product innovation.

Other PVCu windows are energy efficient. Other PVCu windows are strong and secure. The Liniar system is both. Its range of lead-free profiles has been designed from scratch, significantly reducing the need for steel reinforcement and eliminating draughts and leaks whilst delivering superb aesthetics and the highest Windows Energy Ratings as standard.

Liniar isn't constrained by history or by corporate politics. Designed and manufactured by HL Plastics Ltd, Liniar PVCu profile is fully British made. The extrusion facility in Derbyshire boasts the largest mixing plant in Europe and continued investment in the factory, facilities and research and development keeps the Liniar range at the forefront of innovation.

An award-winning company, HL Plastics was visited by the UK Prime Minister in 2014, who was keen to discover the benefits of the thermally efficient profiles and the significant investment the company continues to make in plant, machinery, employees and training.

Having grown significantly since the launch of the Liniar range in 2008, the company has retained its friendly approach and flat structure. This means it is able to respond to customer demands quickly and effectively, giving the brand a well-deserved reputation of excellence within the industry.

Embedded in the firm's culture is a clear customer focus combined with an ethos of constant innovation and development, quality systems and testing – all of which means Liniar customers always have access to the most modern products in the industry and can stay ahead of the game in a competitive market.

With a customer base of approved window fabricators and installers all over the UK and Ireland, together with commercial, technical and design teams to support customers, specifiers can rest assured the Liniar range can meet and exceed industry regulations across its entire product range.



At a glance...

- The Liniar brand belongs to HL Plastics Ltd, part of the Flamstead Holdings group
- £60 million turnover (2014)
- > 400 employees
- Capital investment of £5m per annum
- 10% market share of UK PVCu profiles in the UK
- National Fenestration Awards Systems Company of the Year 2014
- Derby Telegraph Company of the Year 2014
- Flamstead Holdings listed in "1000 companies to inspire Britain"
- Winner of the 2014 Lloyds Bank Growing Business Award - mid-sized company

Fully accredited

It's important to Liniar to prove its products are backed by the highest standards, and an ongoing testing programme ensures that all systems remain fully compliant – often ahead of legislation.

ModLok™



Developed by Liniar, ModLok™ technology not only provides the most secure locking mechanism and unbeatable strength, but also enables the PVCu to be disposed of in the most environmentally friendly way possible at the end of its life.

Secured by Design



Secured by Design is a police-backed initiative, with this status being awarded to products designed with exceptional security features as their main priority. Liniar products that qualify to hold this certification are tested to meet the requirements of the Association of Chief Police Officers.

BBA Approval



The BBA (British Board of Agrément) is the UK's major authority offering approval of construction products, systems and installers. Their certificates are recognised by architects, engineers and specifiers as an impartial and unbiased review on the performance of products, and Liniar holds a certificate for the whole window system.

BS EN ISO 9001:2008



The Liniar factory has achieved BS EN ISO 9001:2008 accreditation, meeting British Standards for a quality management system. The standard is based on a number of principles including a strong customer focus, management motivation, the process approach and continuous improvement. By continuing to meet this standard, Liniar customers benefit from consistently great products and service.

PAS24:2012



This accreditation is part of the British Standards system and shows that every component used to make the product has been subjected to a series of tests, demonstrating enhanced security performance, air and water tightness and wind loading to BS6375 for peace of mind.

BS EN 12608:2003



BS EN 12608:2003 is the standard of quality, consistency and performance required for PVCu extruded hollow profiles. Products are regularly tested to ensure that they continue to meet these standards.

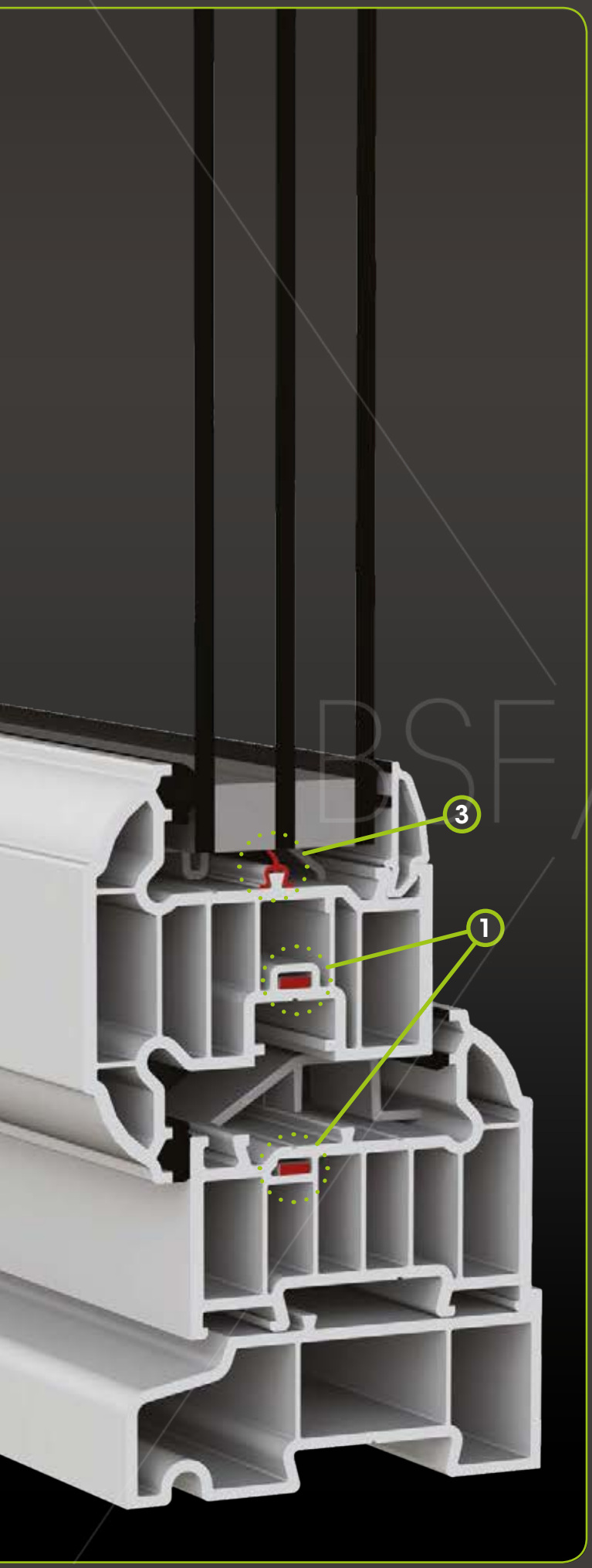

Thermal efficiency vs. reinforcement

Many old 'first generation' PVCu windows relied heavily on steel reinforcement. It was considered essential to securely fix hardware such as hinges and locking mechanisms, in addition to increasing the stiffness of the frame and reducing deflection when subjected to wind gusts. For many years, this was the accepted make up of a PVCu window – and some are still manufactured in this way.

In more recent times energy efficiency became a more prominent topic and the evolution of window products continued with the introduction of PVCu thermal inserts.

These inserts replaced the thermally inefficient steel, occupying the same internal chamber and creating a multi-chambered thermal barrier in the same 3-chambered profiles. Not exactly a giant technological leap, more of a 'gap filler' and not without its drawbacks – these thin inserts add very little to the stiffness of a profile, nor do they provide a secure fixing for hardware.

This resulted in many window systems providers having two different offerings – one which is thermally efficient (with thermal inserts) and one suitable for enhanced security (with steel).

In 2007 the Liniar team set about designing a brand new system with a blank sheet of paper and loads of new ideas – a system which would be both thermally efficient AND strong and secure.

Firstly, there were to be no thermal inserts – the multi-chambered effect was designed to be part of the profile, with both the amount of internal webs and their spacing being fine-tuned with Therm software to achieve exceptional thermal performance.

This principle could only be applied to specific profiles within the system, with transoms and mullions remaining steel-reinforced using a steel box section within the central chamber – this provides the rigidity needed within the frame.

Secondly, the issue of secure fixing for hardware was addressed by incorporating a rectangular pocket directly behind areas where fixings would be used, achieving screw pull-out forces equivalent to that of 1.2mm thick steel when inserted with a PVCu screw retainer **(1)**.

The Liniar window system has been independently tested and verified by the British Standards Institute, meeting PAS 24 with reduced steel and BS6375; air and water leakage and wind loading for structural strength.

By making the most efficient use of materials and avoiding the need for expensive triple glazing, the overall cost of manufacturing a window has also been reduced – delivering benefits to fabricators, installers and end users.

Patented bubble gasket

Historically, PVCu window systems were fitted with a range of EPDM (rubber) gaskets at the fabrication stage, similar to the method still used on timber and aluminium windows. The resulting permeability of the assembled frame was dependent upon the quality of each seal joint, with many suffering from draughts and wind noise.

The PVCu extrusion process lends itself to the well-established technology of co-extrusion - adhering the gasket onto the frame using a separate extrusion machine during manufacture. This evolutionary step eliminates the time-consuming gasket insertion process and creates a more reliable corner seal at each joint.

Many PVCu window systems make use of co-extruded gaskets, most adapting existing profiles to the process.

Starting from scratch, the Liniar team had no constraints, and spent a significant amount of time developing its patented bubble gasket **(2)** to outperform all others in speed of fabrication and in permeability - achieving a zero air leakage during independent tests at BSI.

The design of both the gasket and the area behind the gasket is crucial, not only to the permeability of the finished window, but during the welding process where hard lumps can form in the corners of each joint, cracking sealed units.

Liniar's dual-action gasket performs equally well as a soft dynamic seal on opening sashes as it does as a firm glazing gasket for sealed units, its tolerance friendly design always ensuring a whistle-free seal inside and out – and no gaps, not even in the corners.

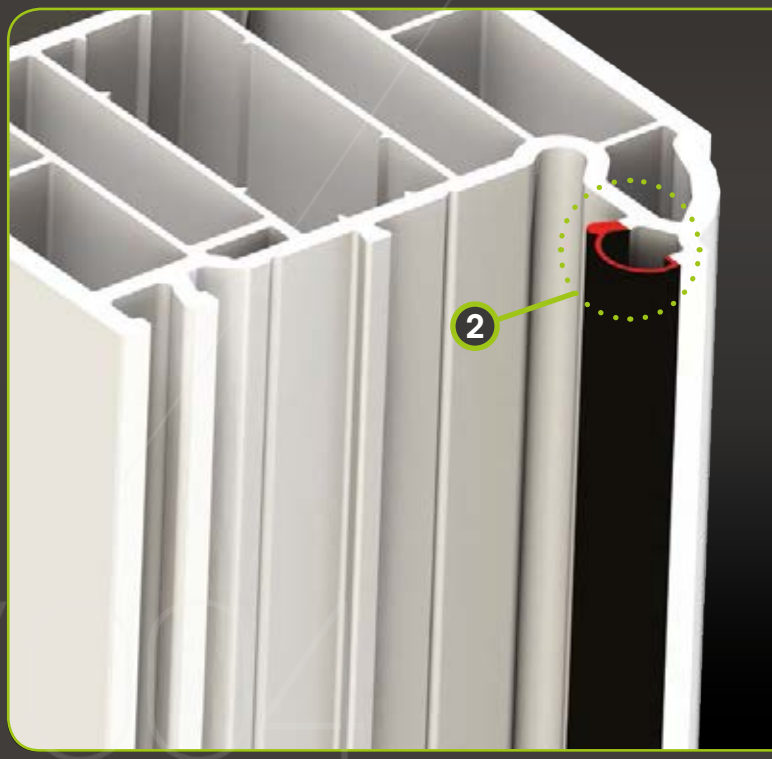

Enhanced performance

As the quantity and spacing of internal webs reduce thermal transmittance through Liniar frames, the flow is directed towards the path of least resistance. To address this, the Liniar design team introduced a brace of simple but effective ancillary products.

The first is the innovative glazing flipper **(3)** – this can be clipped onto the short central up-stand within the glazing area, creating a thermal barrier and additional gasket, and sealing the perimeter of any glazed unit - keeping the heat in and moisture out.

The second is the patented thermal dam **(4)** – introduced to address heat loss at the outer edge of the frame, Liniar's clip-in thermal dam creates a multi-chambered barrier with optimized leg spacing and is manufactured from recycled material produced during the extrusion 'start-up' procedure.

The result is a supremely energy efficient double glazed product, one capable of achieving a cost-effective A+ Window Energy Rating, or 1.2 W/m²K U-Value and if required a triple glazed 0.8 W/m²K U-Value window.

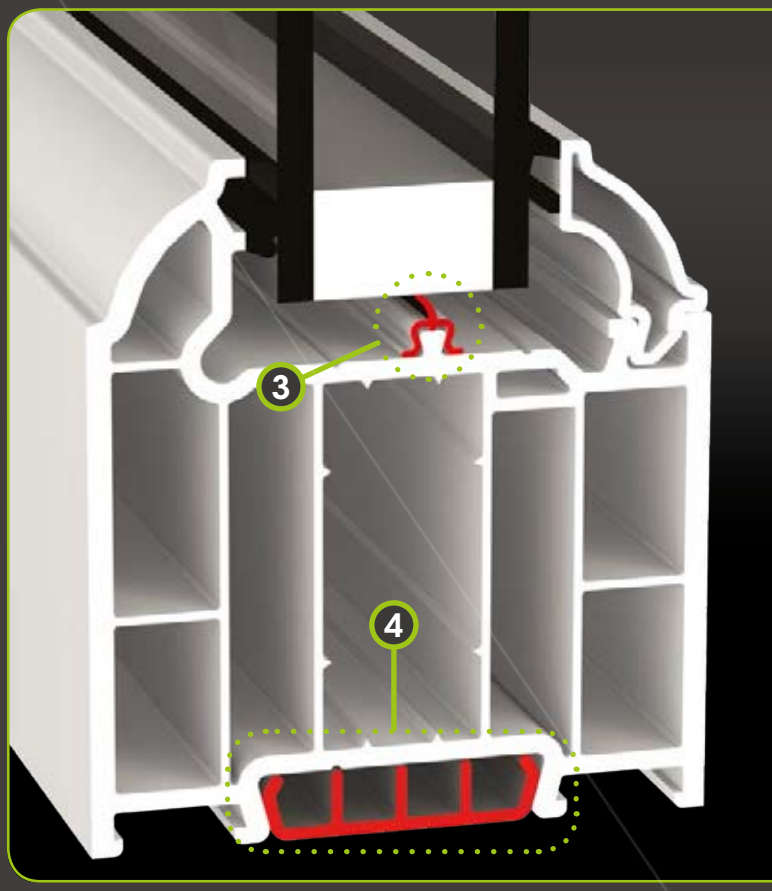



Fully tested and compliant

Not only does Liniar carry out weather testing and security testing, it has invested in a state of the art articulated robot for in-house cyclic testing and development - giving peace of mind that Liniar products will endure the rigours of daily living.

All Liniar systems conform to the provisions of BS 6375 Part 1 for weather performance and Part 2 for window operation and strength characteristics.

Liniar's patented bubble gaskets give optimum weather performance, being co-extruded onto window and door profiles to give a full continuous seal and eradicate draughts.

Liniar systems exceed Part L requirements with the innovative multi-chambered profile achieving BFRC A+ rating as standard. Liniar also provides a database of over 1,000 BFRC thermal simulations to refer to. For more information on the requirements of Part L, please refer to **Approved Document L.**

Liniar has also developed Part M compliant low thresholds with shootbolt facility, for its range of residential, composite, French, patio and bi-folding doors. For more information on Part M, refer to **Approved Document M.**



Approved fabricators

Liniar windows and doors are manufactured by a wide network of fabricators across the UK, many of which have gone through a stringent testing and validation process to become Liniar Approved Fabricators.

Where a Liniar fabricator has the stamp of approval, you can be assured the windows and doors they produce:

- Contain only Liniar supplied or approved parts
- Use only Liniar approved manufacturing processes
- Conform to the latest British Standards
- Have been quality checked before leaving the factory
- Are CE marked in accordance with the latest regulations.

In addition, all Liniar Approved Fabricators have a clear dispute resolution process in place - giving customers assurance that any problems will be swiftly dealt with, together with the peace of mind offered by the Liniar 10 year profile guarantee.

Recycling and sustainability

PVCu is now recognised as a sustainable option when it comes to fenestration products, with the Liniar range leading the way in its environmental credentials.

All PVCu windows are recyclable, but the Liniar system is simpler, and cheaper, to recycle at the end of its life than other systems. The low steel content in a Liniar window results in speedier separation of PVCu and steel and our externally mounted ModLok™ products can be separated in seconds,

As each window can be recycled up to 10 times, this gives PVCu windows an estimated life span of 350 years – more eco-friendly than depleting timber resources.

As a company, Liniar continually strives to improve its environmental performance and reduce its carbon footprint, and has even developed new products to avoid wastage and create opportunities to re-use the PVCu offcuts that would otherwise be sent to landfill.

The company is proud of its record of ZERO operational wastage, with 100% of production waste PVCu (around 1,200 tonnes per year) re-ground at its in-house recycling facility before being formulated into new products. The Liniar decking range is made from 86% recycled PVCu, with its plastic piling range composed of a staggering 100% recycled material.

Liniar's environmental policy is to ensure its processes, conditions and systems shall have as little effect on the environment as is reasonably practicable.

It is the company's policy to:

- Comply with the relevant environmental legislation and codes of practice
- Minimise the risk to the public from its operations
- Protect the natural environment
- Conserve resources and minimise waste
- Train and supervise staff to ensure their actions are with due care for the environment
- Require contractors to meet the same standards of environmental care
- Assess the environmental impact of any new site development
- Regularly assess the environmental impact of the company's operations.

The Liniar fleet delivers products nationwide around the UK. All vehicles are selected with low emissions and the highest fuel economy in order to minimise this impact.



Liniar's **product range**

A continued programme of investment in research and development results in the highest quality products. With 21 patents and 23 Registered Community Designs to protect the range, the Liniar team leads the way in innovation.



Casement window

A Liniar casement window offers total versatility, with its traditional British style offering slim sight lines to let in maximum light.

Available in sculptured or chamfered profile, 28mm double or 36mm triple glazing, internally or externally beaded, with standard 4-chamber or EnergyPlus 6-chamber profile – with a wide choice of opening configurations, colours, finishes, hardware and glazing options, with Georgian bars also available.



Flush Sash window

The latest exciting development from Liniar, the flush sash offers the realism of a traditional pre-1932 timber window combined with 21st century thermal benefits. With the sash fitting flush into the frame, this window can also offer a contemporary appearance.

Available in sculptured profile with the flush finish on external faces, 28mm double glazing, internally beaded, with a wide choice of opening configurations, colours, finishes, hardware and glazing.



Residential door

The Liniar range of PVCu doors is designed to perfectly match the suite of windows and offers the same thermal benefits.

Available in sculptured or chamfered profile, 28mm double or 36mm triple glazing, internally beaded, with standard 4-chamber or EnergyPlus 6-chamber profile – together with threshold options including Part M compliant and a wide choice of colours, finishes, hardware and glazing options.



Tilt & Turn window

Perfect as a fire escape or simply to let in more fresh air, Liniar tilt and turn windows are available with either 'tilt before turn' and 'turn before tilt' options.

Available in sculptured or chamfered profile, 28mm double or 36mm triple glazing, internally beaded - available with a wide choice of opening configurations, colours, finishes, hardware and glazing options, with Georgian bars also available.



Pivot window

Offering a full 180° pane rotation, the Liniar pivot window provides a clever solution for high windows that are difficult to clean from the outside.

Available in chamfered profile, 28mm double or 36mm triple glazing, internally beaded, with a wide choice of colours, finishes, hardware and glazing options.



Composite door

Offering up to six times the insulation properties of a timber door, a Liniar composite door guarantees high security combined with maintenance free enduring performance.

Available in sculptured or chamfered profile, with 44mm or 49mm door slabs, together with a wide choice of colours, finishes, hardware and glazing options.



French door

The Liniar French door range is designed to perfectly match the suite of windows, offering the same thermal benefits with a choice of 'open in' or 'open out' styles.

Available in sculptured or chamfered profile, 28mm double or 36mm triple glazing, internally beaded, with standard 4-chambered or EnergyPlus 6-chambered profile – together with a wide choice of colours, finishes, hardware, thresholds and glazing options.



Standard bi-fold door

The original bespoke designed PVCu bi-folding door, the Liniar standard bi-fold offers opening configurations up to 4 panes wide.

Available in sculptured profile with outward or inward opening, internally beaded, multi-chambered profile, 28mm double glazing, with a wide choice of colours, finishes, thresholds and glazing options.



ModLok™ Patio door

The Liniar sliding patio door was designed from scratch to take advantage of the very latest technology, and has been cyclic tested by Liniar's in-house robot to provide assurance that it's built to last.

Available in sculptured profile with external sliding and internal beading, EnergyPlus 6-chambered profile, 28mm double or triple glazing, with a wide choice of colours, finishes, thresholds and glazing options.



ModLok™ bi-fold door

The ModLok™ bi-fold door is a heavy duty solution for applications up to 7 panes wide. Cyclic tested to more than 10 times British Standard, the Liniar ModLok™ bi-fold combines the structural benefits of an aluminium with the energy efficiency of PVCu. The ModLok™ bi-fold features aluminium reinforcing with a high security locking mechanism. Available in the same colours, finishes and glazing options as the Standard.

The Liniar **outdoor range**

Not only for housing and commercial developments, the Liniar range also includes outdoor products, providing low maintenance PVCu solutions for a variety of applications.



Piling and retaining systems

The Liniar range of piling is made from recycled PVCu and is available in a variety of styles for different applications. From flood defence to soil retention, utility trench piling to track side shelters for the rail industry, plastic piling is a cost effective alternative to steel or timber. A free CPD training session is available – please contact us.



Verandahs and decking

A huge success in the caravan and holiday home industries, Liniar verandah and decking systems are also used for domestic gardens and landscaping applications. Beautifully foiled finishes give the sculptured balustrade system an authentic, maintenance free appearance, and a wide range of accessories is also available.



Fencing

Liniar's fencing range comprises a fence post and gravel board system, which is surprisingly strong. The steel-reinforced posts are installed in exactly the same way as more unattractive concrete or timber products, whilst offering a more durable and maintenance-free solution. The fencing range can be used as the basis for bespoke landscaping projects.

70mm system





Liniar's innovative lead-free 70mm window system is available in a choice of chamfered and sculptured suites, with all style options in a wide range of colours and finishes to suit any building or project.

BSF/004

Thermally efficient

Liniar's revolutionary 70mm profiles are far more thermally efficient than traditional PVCu window profiles. By removing unnecessary steel reinforcement, instead developing the latest in multi-chambered profile technology, the heat stays where it belongs - inside the property.

Cost effective

The reduction in steel results in a more cost effective window at the fabrication stage. Fitter friendly features also reduce installation times, saving money on the job. The occupant also benefits with systems capable of A+ and a U-value as low as 0.8.

Better for the environment

Liniar frames have always been 100% lead-free, well in advance of legislation. Furthermore, all elements of a Liniar window are fully and easily recyclable at the end of its life.

Guaranteed

Liniar profiles come with a 10 year guarantee against cracking, warping or discolouration.

- Designed completely from scratch by a team with over 500 years of industry experience
- Fitted with high security multi-point locking as standard
- Available in a wide range of colours and foiled finishes
- Ultra-slim sightlines for maximum light
- Patented co-ex bubble gasket - tested and assessed to BFRC energy rating standards with zero air leakage shown in the results
- Designed with two thirds less steel than a GGF standard window
- Fully tested and accredited
- Met requirements of PAS 24:2012 with reduced steel reinforcing
- All systems conform to BS 6375 Part 1 for weather performance and Part 2 for window operation and strength characteristics.

In this section

1 Casement window
Page 26

2 EP Casement window
Page 28

3 Tilt & Turn window
Page 30

4 Flush Sash window
Page 32

5 Pivot window
Page 34

6 Residential door
Page 36

7 Composite door
Page 38

8 French door
Page 40

Case study

Redrow Homes is one of the UK's leading residential property developers, and was looking for something slightly different when it came to specifying windows for its brand new development of luxury homes, Abode in Buckley.

The development, consisting of 63 highly-specified 2-4 bedroomed homes, is aimed at the younger house buyer; with Redrow's designers aiming for a combination of traditional and contemporary in one dwelling.

Redrow requested a sample of the Liniar flush sash PVCu window, designed by Liniar to replicate traditional timber windows from the pre-1932 era, where the sash fits flush into the frame – totally unlike other types of PVCu window. The sample was foiled in flat grey to give this traditional-looking window a modern edge, and the Redrow team liked the contemporary appearance of the window.

The aesthetics of the project were so critical that Redrow took the somewhat unusual step of building a house within its head office so they could see what the windows would actually look like when fitted. The replica house was made from stud walls and exterior brickwork.

The project team were delighted with the finished result, not only from the perspective of appearance, but also the ease of installation, which would make the on-site build more efficient for the fitters and



ensure the project could be completed well within the planned timescales.

Steve Walsh, Redrow's Construction Director for the North West region, commented:

> As soon as we saw the flush sash window, we knew it was what we needed for the Abode development.
>
> It ticked all our boxes – lead-free, energy efficient, easy to install – and best of all, it gave us the overall aesthetics we were looking for.

For full case study, please visit www.liniar.co.uk/specifiers

Window & door configurations

The below tables show the different window and door configurations available from Liniar.

Casement Window


Standard Configurations


Mock Sash Horn


Arched Top Moulding


French Window Fire Escape

Tilt & Turn Window


Standard Configurations


Arched Top Moulding


French Window Fire Escape

BSF/004

Flush Sash Window


Standard Configurations


French Window Fire Escape

Pivot Window


Standard Configurations

Residential and French Doors


Residential Door Full Glass or Panel


Residential Door with Midrail

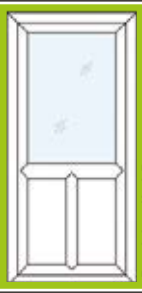
Residential Door Half Cruciform

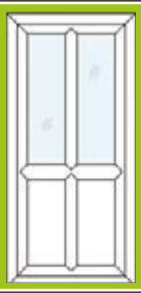
Residential Door Full Cruciform


French Door Full Glass or Panel


French Door with Midrail



White mock sash horn casement windows
Seddon Homes

Casement window

Outward opening, internally beaded*

Vertical Cross Section

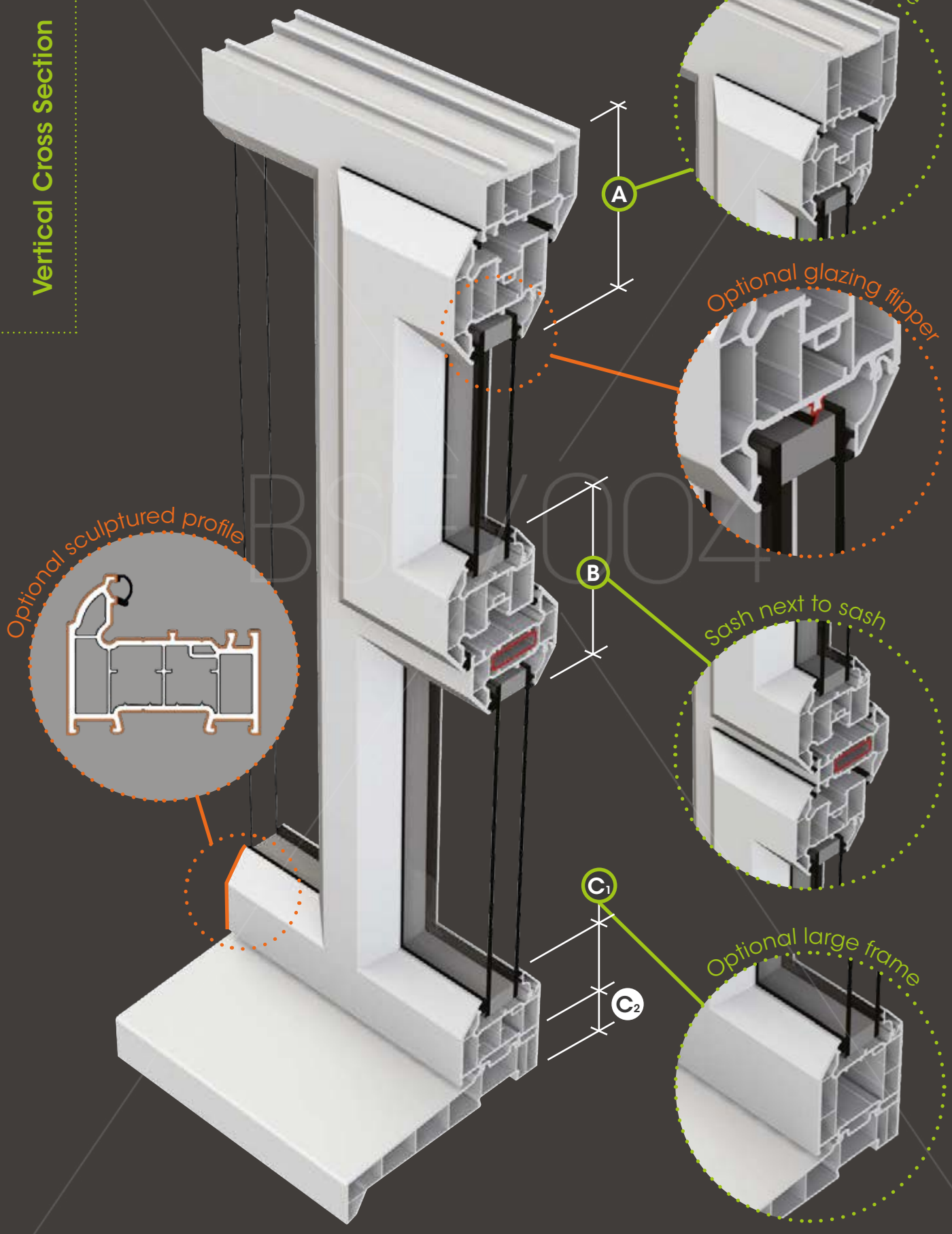

BOF0024

** externally beaded options are also available and feature the same sightlines*

Technical information

Casement window

- Sculptured and chamfered suites
- 28mm double and 36mm triple glazing
- 4 chambered multi wall profiles
- U-values from 1.2 (DGU) and 0.9 (TGU)
- Patented co-ex gasket

Accreditations

Colour Options



Additional colours are available to order as specials.
The colours shown in this brochure give an indication only.



Product	Dim. A
Small frame & sash L#W011 & L#W031	104mm
Large frame & sash L#W016 & L#W031	124mm

Product	Dim. B
Transom & sash L#W022 & L#W031	114mm
Int. transom & sash L#W027 & L#W031	134mm
Transom & 2 x sash L#W021 & 2 x L#W031	161mm
Int. transom & 2 x sash L#W026 & 2 x L#W031	181mm

Product	Dim. C_1
Small frame L#W011	57mm
Large frame L#W016	77mm

Product	Dim. C_2
85, 150, 165, 180 cills LSL085, LSL150, LCL165, LSL180	30mm

 # Replace notation with (C) for Chamfered suite or (S) for Sculptured suite

EnergyPlus Casement **window**

Outward opening, internally beaded*

Vertical Cross Section

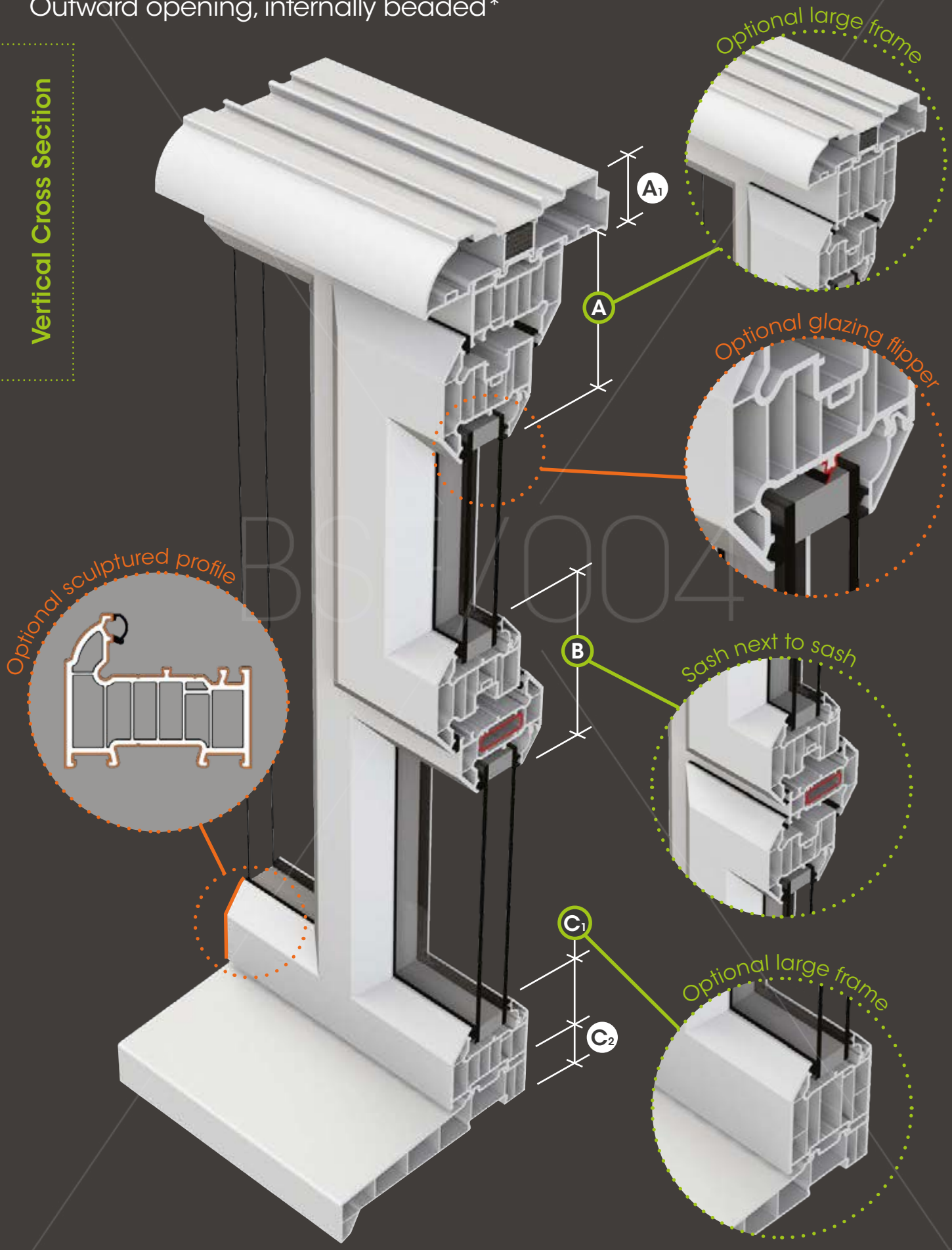

BOF004

** externally beaded options are also available and feature the same sightlines*

Technical information

EnergyPlus Casement window

- Sculptured and chamfered suites
- 28mm double and 36mm triple glazing
- Multi chambered EnergyPlus profiles
- U-values from 1.2 (DGU) and 0.8 (TGU)
- Patented co-ex gasket

Accreditations

Colour Options



Additional colours are available to order as specials.
The colours shown in this brochure give an indication only.



Product	Dim. A_1
Head vent LHV30 & LHV31	30mm
Optional for all Liniar products	

Product	Dim. A
Small frame & sash L#W012 & L#W033	104mm
Large frame & sash L#W017 & L#W033	124mm

Product	Dim. B
Transom & sash L#W022 & L#W033	114mm
Int. transom & sash L#W027 & L#W033	134mm
Transom & 2 x sash L#W021 & 2 x L#W033	161mm
Int. transom & 2 x sash L#W026 & 2 x L#W033	181mm

Product	Dim. C_1
Small frame L#W012	57mm
Large frame L#W017	77mm

Product	Dim. C_2
85, 150, 165, 180 cills LSL085, LSL150, LCL165, LSL180	30mm

 # Replace notation with (C) for Chamfered suite or (S) for Sculptured suite

Tilt & Turn **window**

Inward opening, internally beaded

Vertical Cross Section

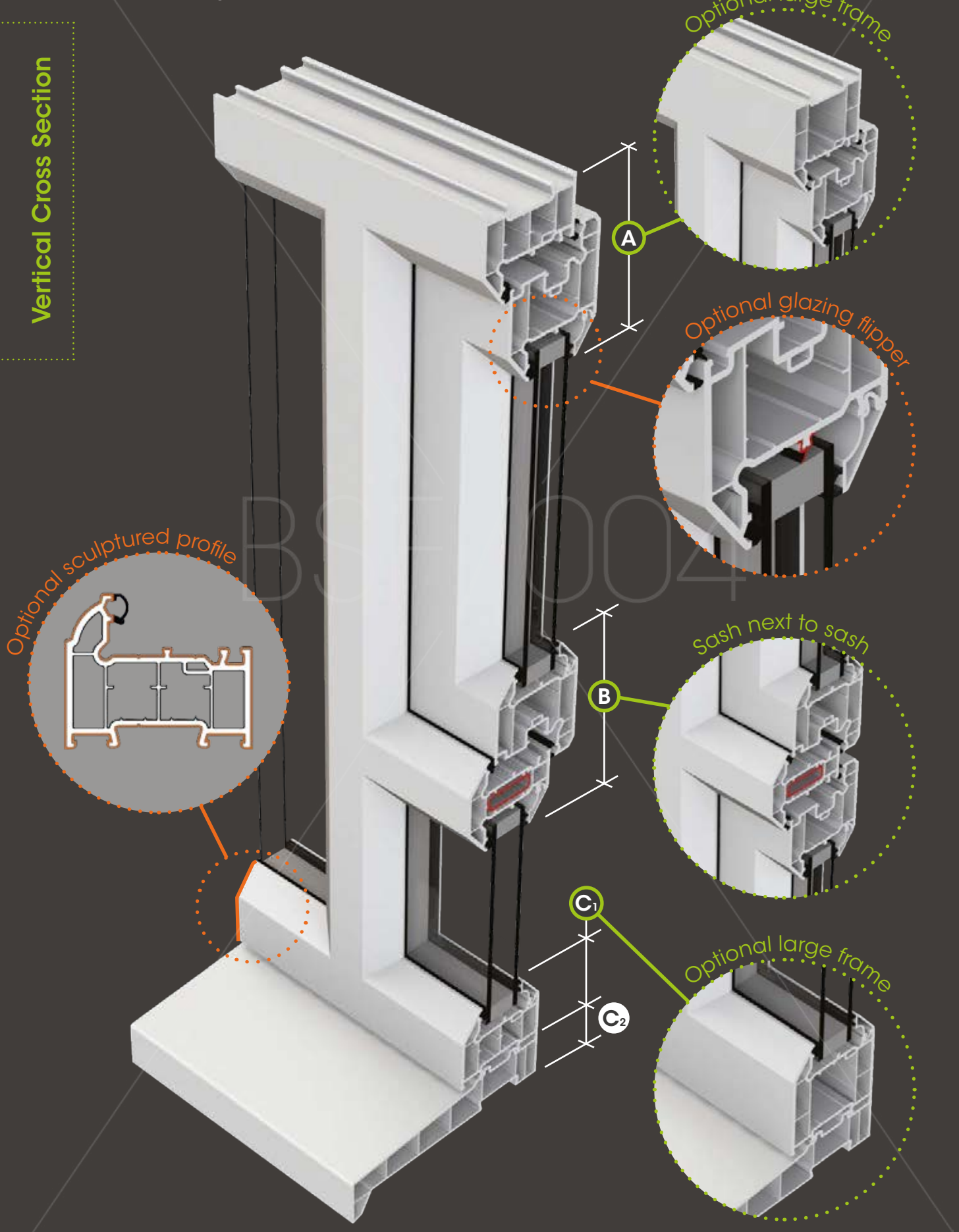

Technical information

Tilt & Turn window

- Sculptured and chamfered suites
- 28mm double and 36mm triple glazing
- Ideal for fire exits
- U-values from 1.3 (DGU) and 0.9 (TGU)
- Patented co-ex gasket

Accreditations

Colour Options



Additional colours are available to order as specials.
The colours shown in this brochure give an indication only.



Product	Dim. A
Small frame & sash L#W011 & L#W035	111mm
Large frame & sash L#W016 & L#W035	131mm

Product	Dim. B
Transom & sash L#W021 & L#W035	121mm
Int. transom & sash L#W026 & L#W035	141mm
Transom & 2 x sash L#W021 & 2 x L#W035	175mm
Int. transom & 2 x sash L#W026 & 2 x L#W035	195mm

Product	Dim. C_1
Small frame L#W011	57mm
Large frame L#W016	77mm

Product	Dim. C_2
85, 150, 165, 180 cills LSL085, LSL150, LCL165, LSL180	30mm

 # Replace notation with (C) for Chamfered suite or (S) for Sculptured suite

7 great reasons to choose Liniar

Innovative – a culture of research and development means exciting new product launches and continuous improvements

Energy efficient – designed from scratch to achieve the pinnacle of thermal performance and retain more heat inside the property

Safe and secure – engineered with built-in security features and approved by independent testing facilities

British made – manufactured in a state-of-the-art factory in the heart of Derbyshire

Lead free – all Liniar profiles are extruded using materials that are 100% lead free

Quality assured – backed with ISO 9001 accreditation for peace of mind

Guaranteed – all Liniar PVCu profiles are guaranteed to not warp, split or discolour for a period of 10 years

Flamstead House
Denby Hall Business Park
Denby
Derbyshire DE5 8JX

Tel: +44 (0)1332 883900
Fax: +44 (0)1332 883901
Email: sales@liniar.co.uk

www.liniar.co.uk