A1

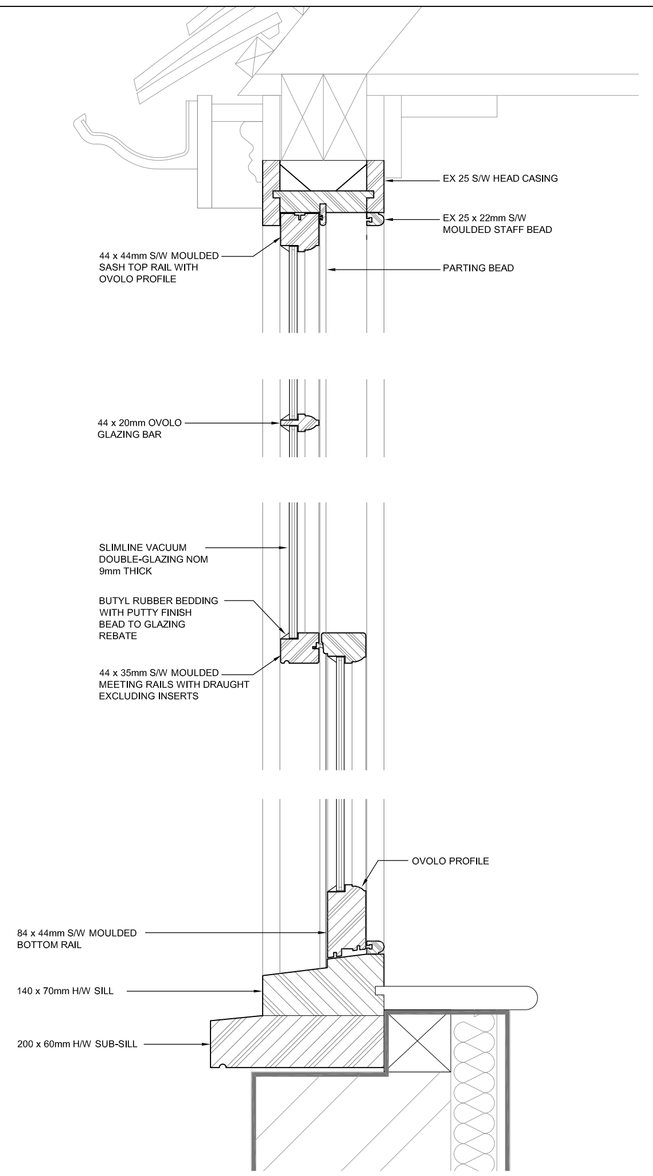

A1/3 VERTICAL SECTION THROUGH SLIDING SASH BAY WINDOW WG-01 + 02 (WF-01 + 03 SIMILAR)

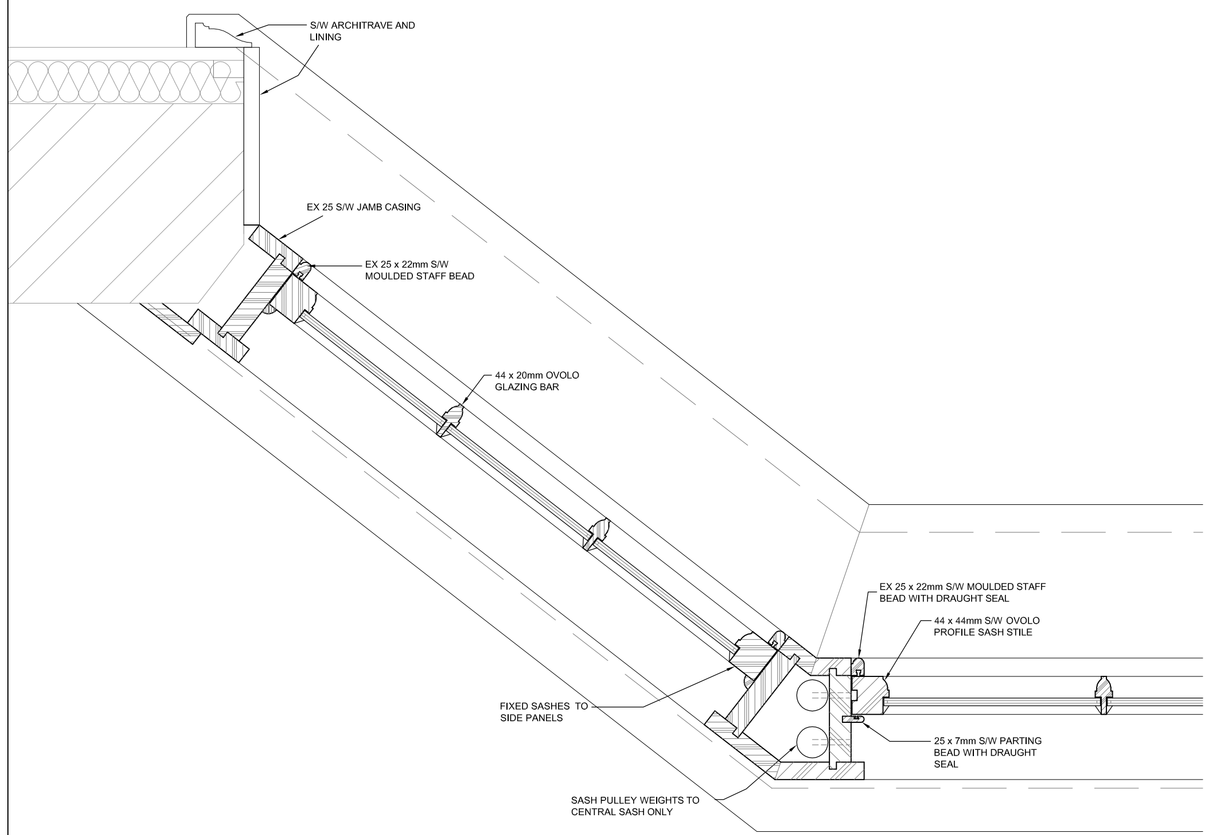

A1/2 PLAN OF SLIDING SASH BAY WINDOWS WG-01 + 02

A2

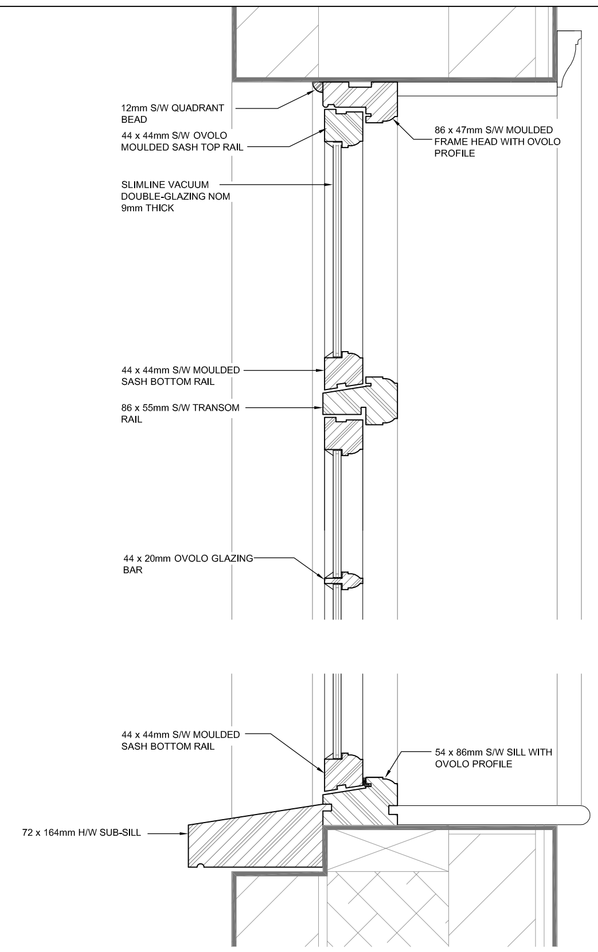

A2/2 VERTICAL SECTION THROUGH CASEMENT WINDOW

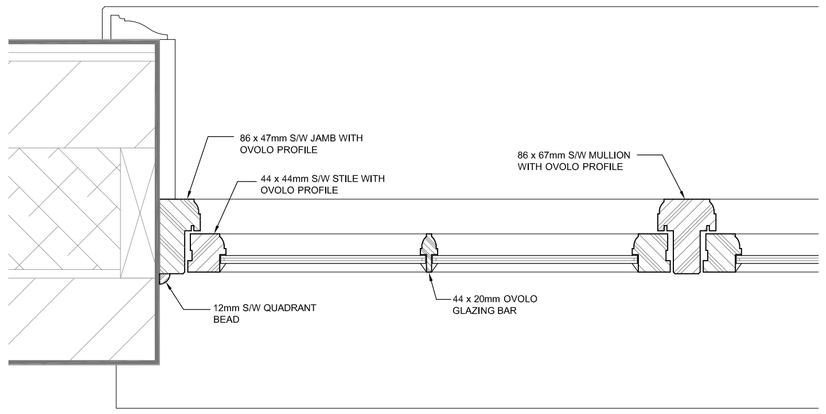

A2/1 JAMB DETAIL TO FLUSH CASEMENT WINDOW

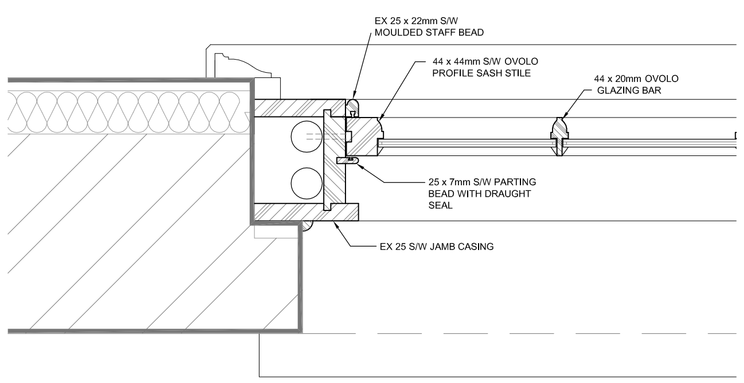

A1/1 PLAN OF JAMB OF SLIDING SASH BAY WINDOWS WF-01 + 03

A3

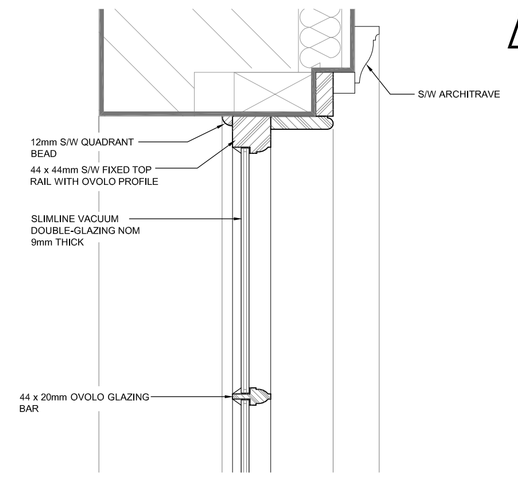

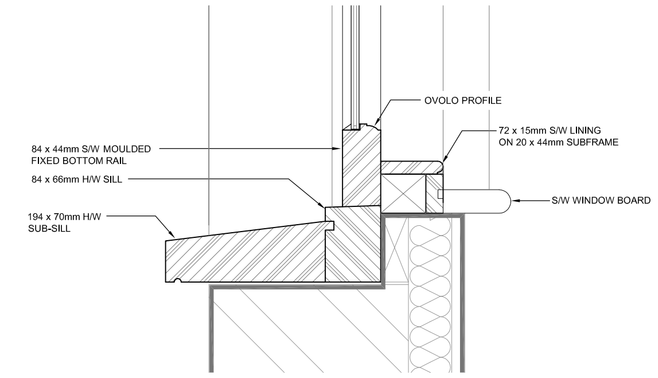

A3/2 VERTICAL SECTION TO FIXED LIGHT WINDOW

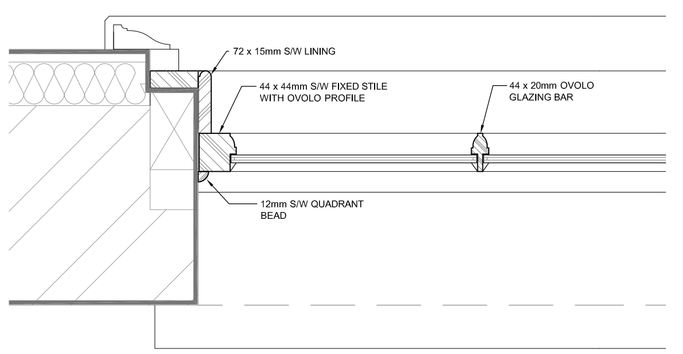

A3/1 JAMB DETAIL TO FIXED LIGHT WINDOW

-

REVISIONS

COOK & COOK

2 WATER LANE
OAKINGTON
CAMBRIDGE
CB24 3AL

Tel : 01223 234849
Email : info@cookandcook.co.uk

Project

STONELY HOUSE
37 - 41 MAIN ROAD
STONELY, ST NEOTS PE19 5EH

For Tom Salkield

Drawing

PROPOSED JOINERY SCHEDULE
DOOR + WINDOW FRAME DETAILS
ASSEMBLY DETAILS A1, A2, A3

Date: Nov 2024

Scale: 1:5

Drawn by: MH

Checked by: -

Drawing no: S667-DC-11

File ref:

Revision: -

0 100 200 300 400 500mm

SCALE 1:5 @ A1