A7

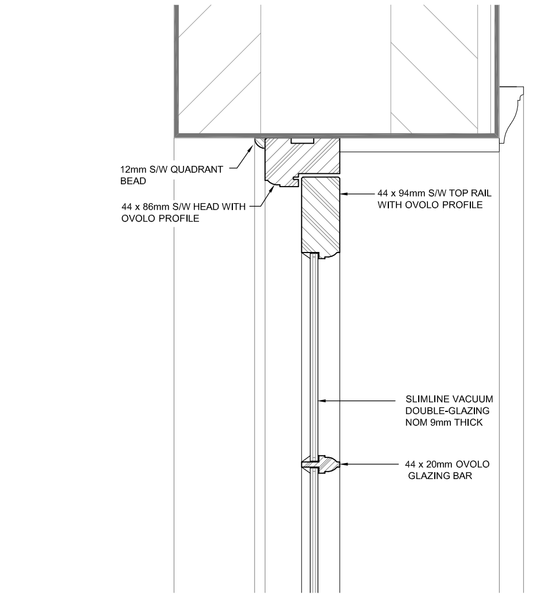

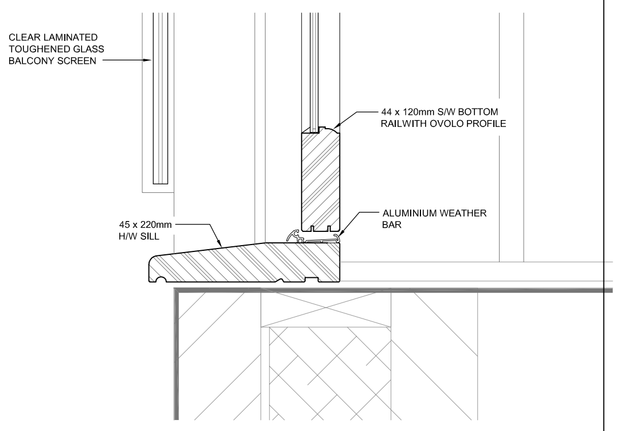

A7/3 INWARD OPENING GLAZED DOORS
DF-01 + DF-02: VERTICAL SECTION

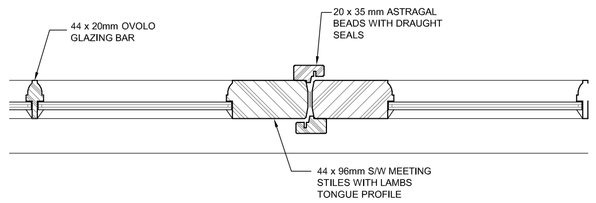

A7/2 INWARD OPENING GLAZED DOORS
DF-01 + DF-02: MEETING STILES

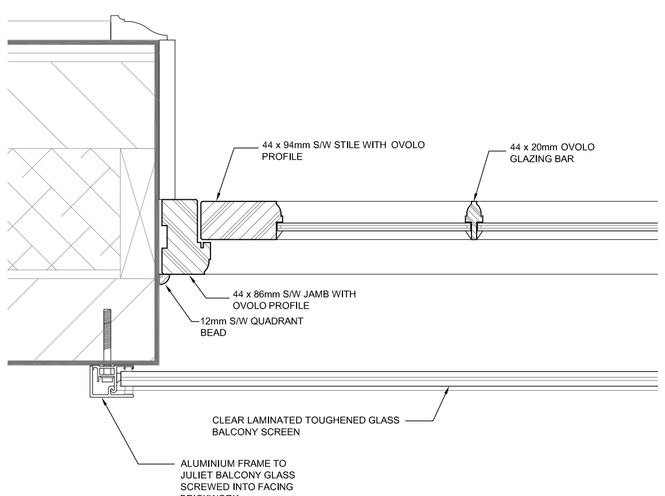

A7/1 INWARD OPENING GLAZED DOORS
DF-01 + 02: PLAN AT JAMB

A8

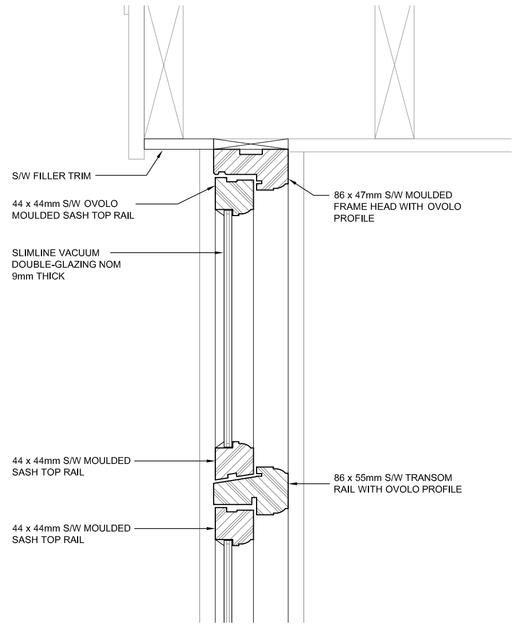

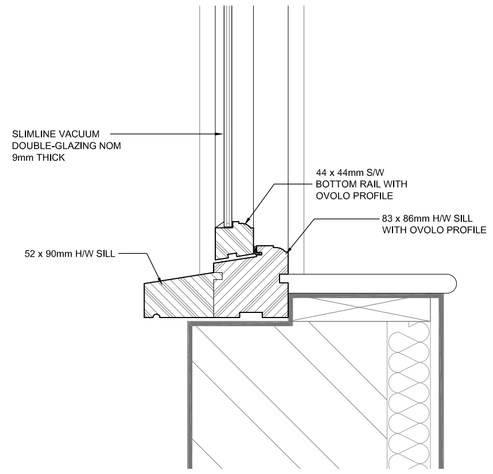

A8/2 STUDY CONSERVATORY GLAZING
SECTION THROUGH WINDOW WG-05

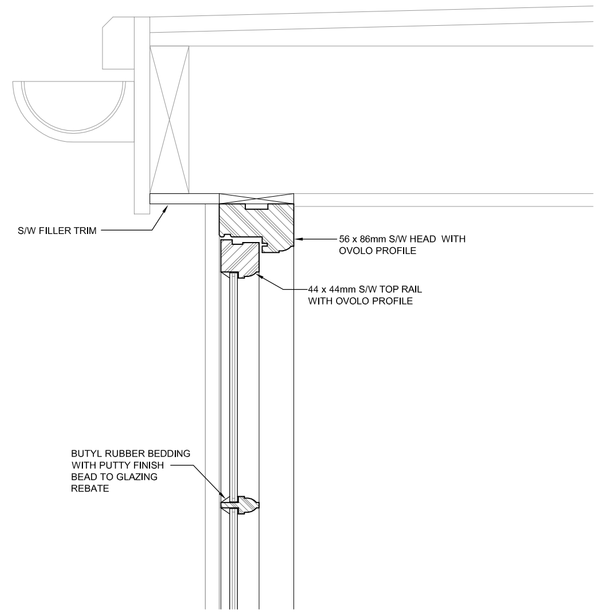

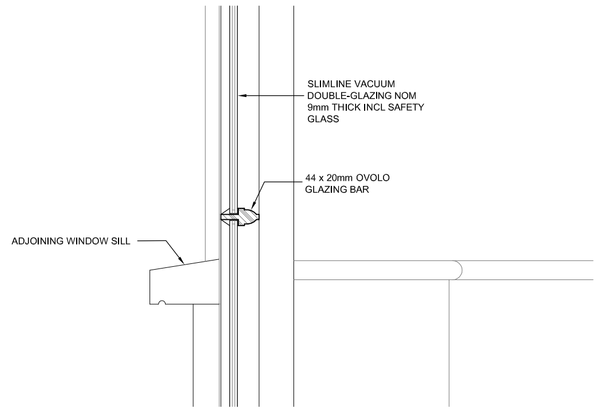

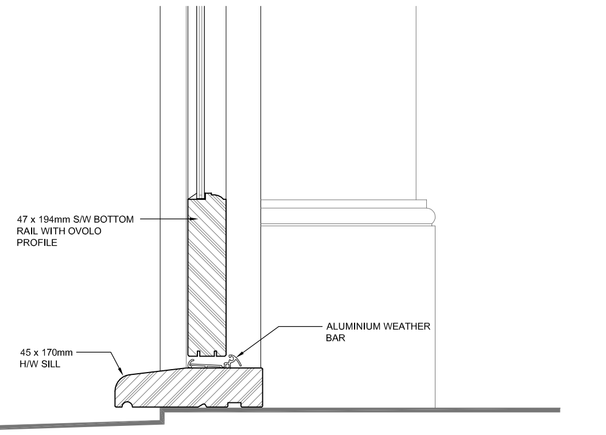

A8/3 CONSERVATORY GLAZING
SECTION THROUGH DOOR DG-02

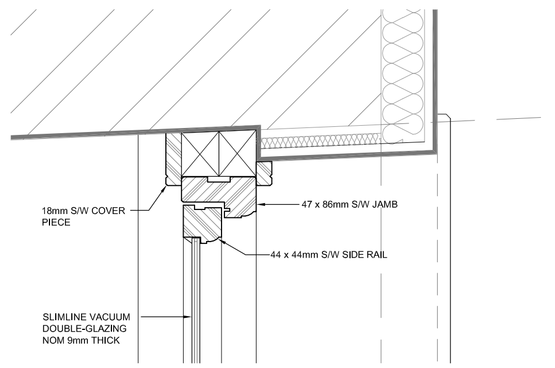

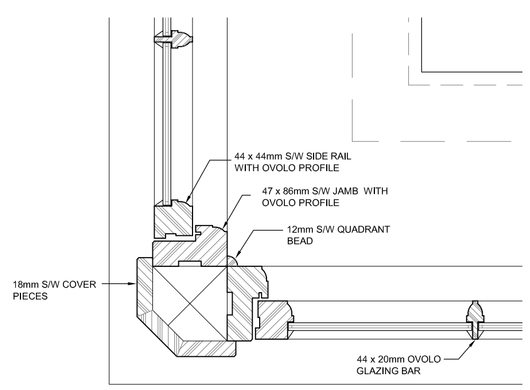

WG-04

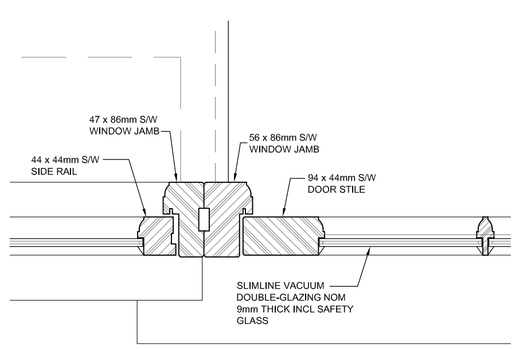

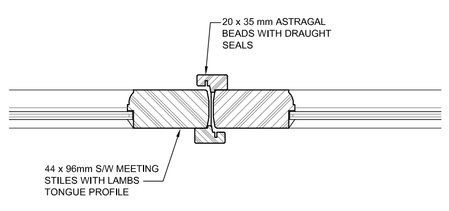

A8/1 STUDY CONSERVATORY GLAZING
PLAN OF WINDOWS WG-04 + 05, DOOR DG-02

A9

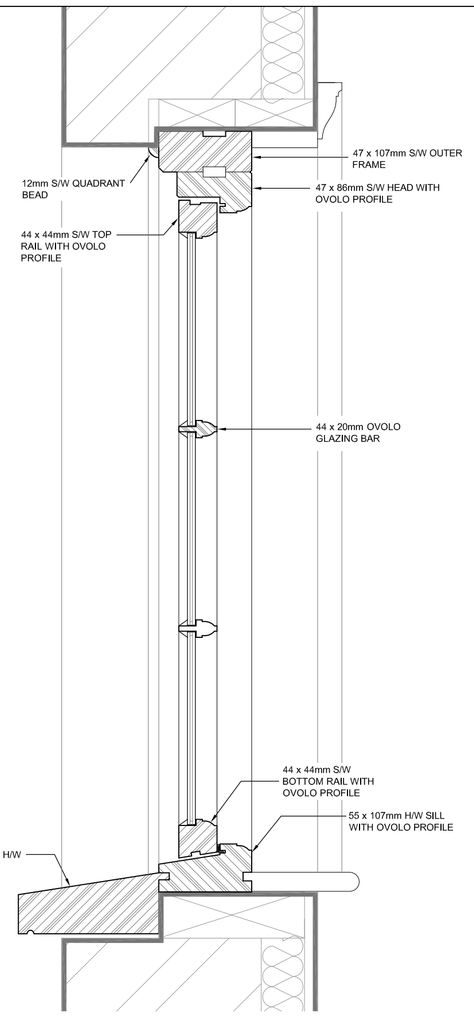

A9/2 FLUSH CASEMENT WINDOW WITH
OUTER FRAME WF-04: PLAN AT JAMB

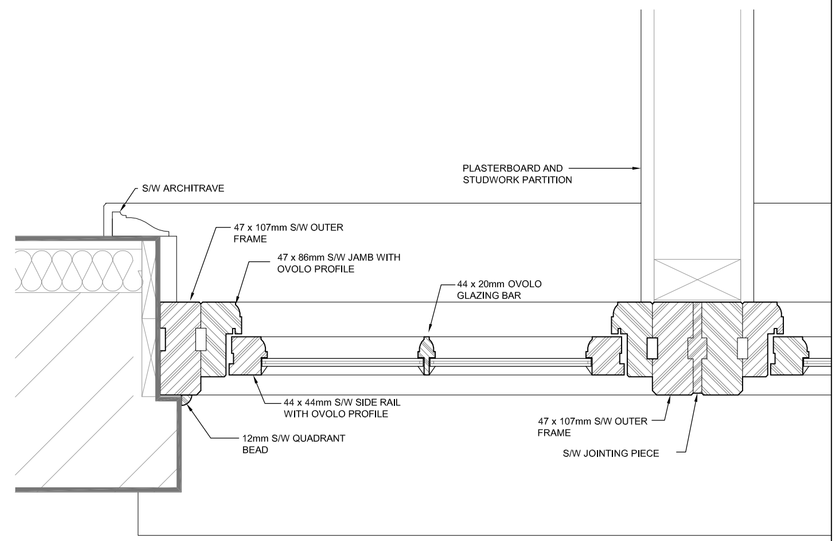

A9/1 FLUSH CASEMENT WINDOW WITH
OUTER FRAME WF-04: PLAN AT JAMB

0 100 200 300 400 500mm

SCALE 1:5 @ A1

-

REVISIONS

COOK & COOK
2 WATER LANE
OAKINGTON
CAMBRIDGE
CB24 3AL
Tel : 01223 234849
Email : info@cookandcook.co.uk

Project
STONELY HOUSE
37 - 41 MAIN ROAD
STONELY, ST NEOTS PE19 5EH

For Tom Salkield

Drawing
PROPOSED JOINERY SCHEDULE
DOOR + WINDOW FRAME DETAILS
ASSEMBLY DETAILS A7 - A9 INC

Date: Nov 2024
Scale: 1:5
Drawn by: MH
Checked by: -
Drawing no: S667-DC-13
File ref:
Revision: -