AS 0830 D 50 HZ

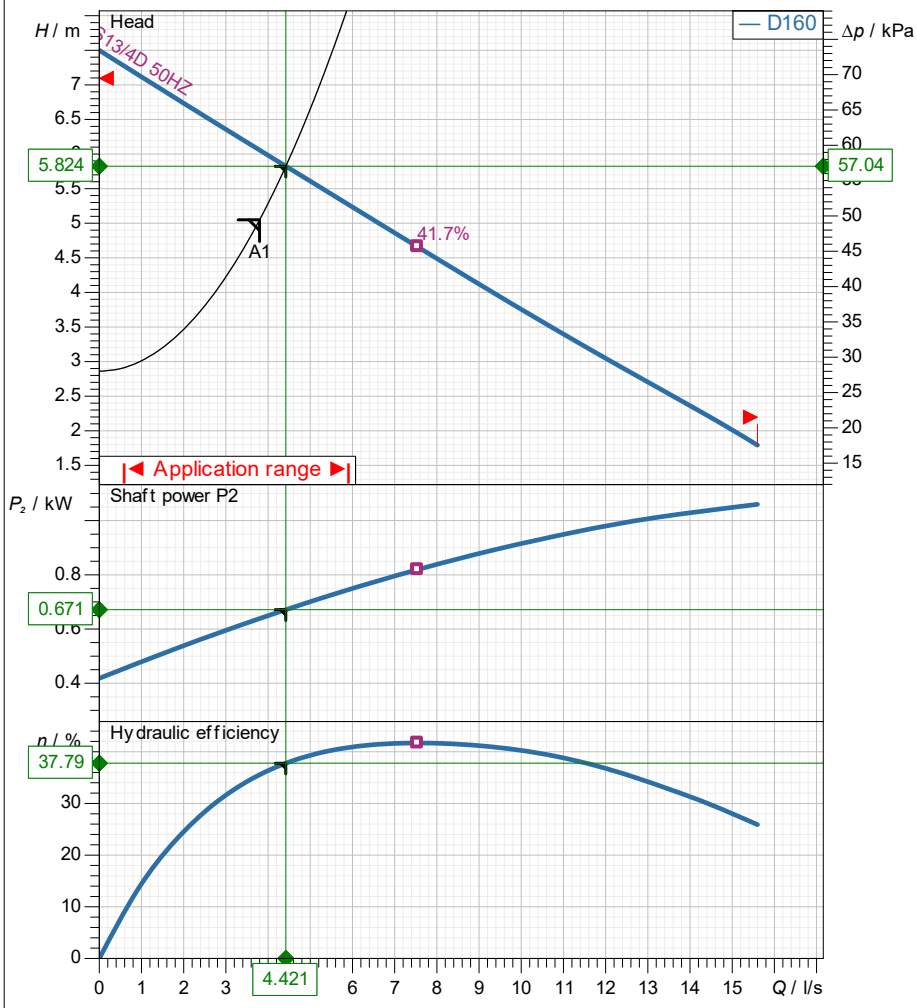

Test Standard
ISO 9906, HI 11.6/14.6≤10kW

Curve Name
D160

Impeller Diameter
160 mm

2024-11-06

Operating data specification			
Flow	4.421 l/s	Power input	0.986 kW
Efficiency	37.8 %	Head	5.82 m
NPSH		Shaft power	0.671 kW
Temperature	20 °C	Fluid	Water
No. of pumps	1	Nature of system	Single head pump
Pump data			
Type	AS 0830 D 50 HZ	Make	SULZER
Series	AS	Impeller	Vortex impeller
N° of vanes	6	Impeller size	160 mm
Free passage	60 mm	Suction flange	
Discharge flange	DN80	Type of installation	
Moment of inertia			Wet-well stationary
Motor data			
Rated voltage	400 V	Frequency	50 Hz
Rated power P2	1.3 kW	Nominal Speed	1330 1/min
Number of poles	4	Efficiency	67.2 %
Power factor	0.77	Rated current	3.6 A
Starting current	11.1 A	Rated torque	9.34 Nm
Starting torque	20 Nm	Degree of protection	IP 68
Insulation class	F	No. starts per hour	15

Sulzer reserves the right to change any data and dimensions without prior notice
and can not be held responsible for the use of information contained in this software.

Curve number	Pump performance curves	SULZER
Reference curve AS 0830 D 50 HZ	**AS 0830 D 50 HZ**	

					Discharge	Frequency
					DN80	50 Hz
Density	Viscosity	Test Standard			Rated speed	Date
998.3 kg/m³	1.005 mm²/s	ISO 9906, HI 11.6/14.6≤10kW			1432 1/min	2024-11-06
Flow	Head	Shaft power	Power input	Rated power P2	Hyd. efficiency	NPSH
4.421 l/s	5.82 m	0.671 kW	0.986 kW	1.3 kW	37.8 %	

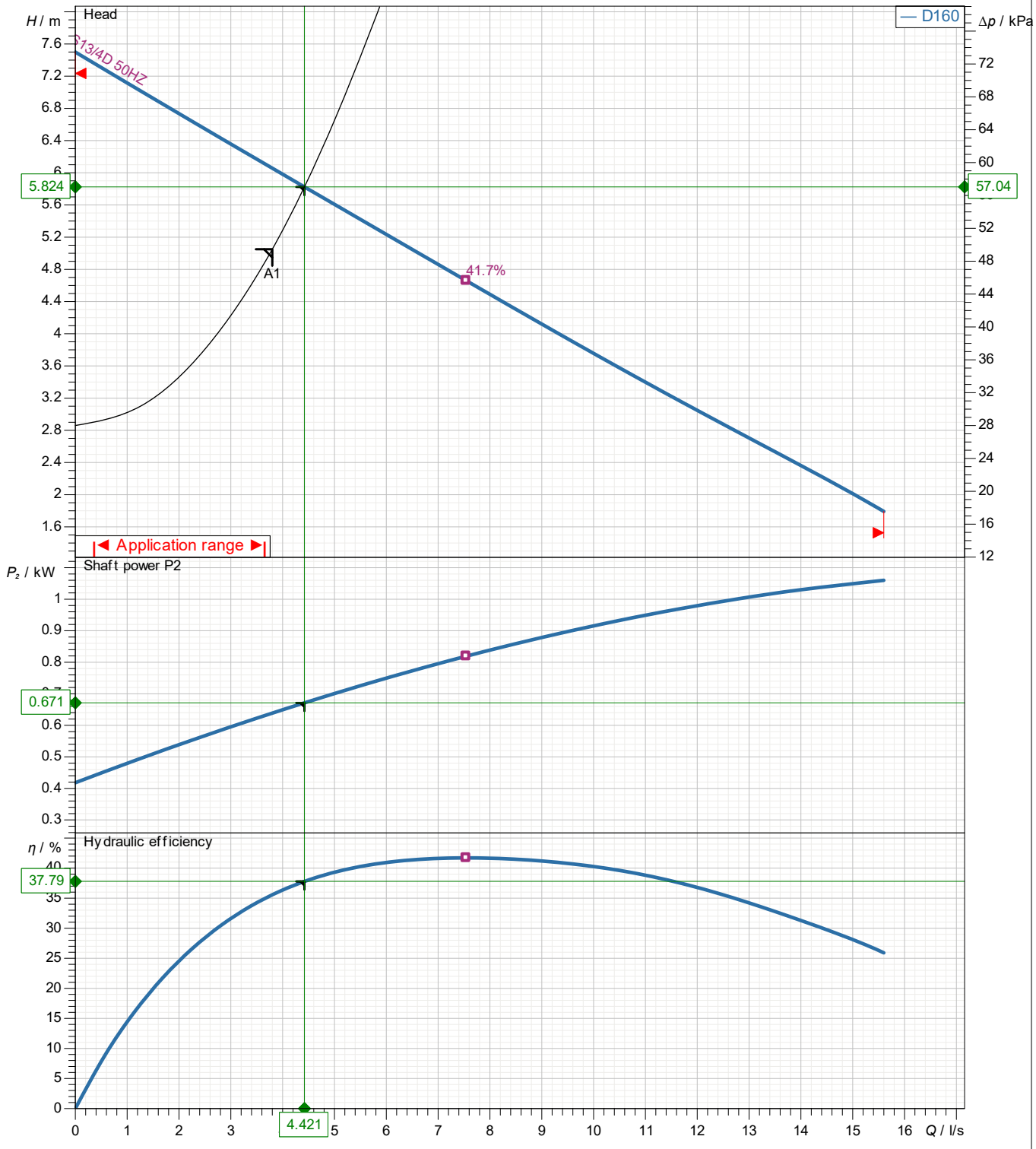

Wet-well stationary

Impeller size	N° of vanes	Impeller	Solid size	Revision
160 mm	6	Vortex impeller	60 mm	

Sulzer reserves the right to change any data and dimensions without prior notice
and can not be held responsible for the use of information contained in this software.

Frequency 50 Hz		**Motor performance curve** S13/4D 50HZ	SULZER

Rated power		Nominal Speed	Number of poles	Rated voltage	Date
1.3 kW		1329 1/min	4	400 V	2024-11-06

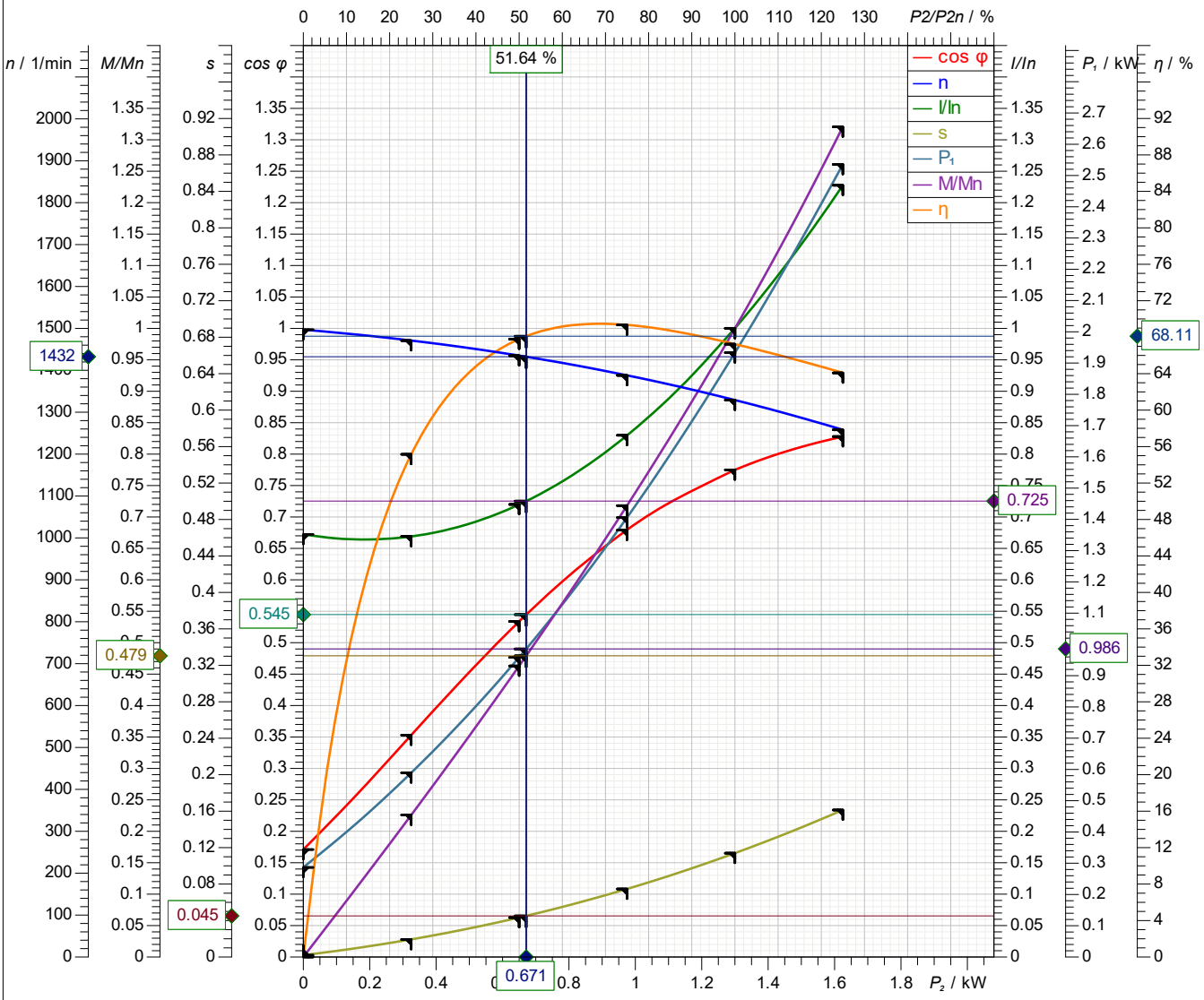

Symbol	No load	25 %	50 %	75 %	100 %	125 %
P_2 / kW	0	0.325	0.65	0.975	1.3	1.625
P_1 / kW	0.2867	0.5893	0.9587	1.406	1.933	2.535
I / A	2.42	2.409	2.592	2.988	3.601	4.42
cos φ	0.171	0.3531	0.5339	0.6791	0.7749	0.828
n / 1/min	1497	1471	1435	1388	1329	1258
s / %	0.1997	1.935	4.331	7.469	11.4	16.13
M / Nm	0	2.11	4.325	6.708	9.341	12.34
η / %	0	55.15	67.8	69.35	67.24	64.09

Tolerance according to VDE 0530 T1 12.84 for rated power

Starting current	Starting torque	Moment of inertia	No. starts per hour
11.1 A	20 Nm		15

Sulzer reserves the right to change any data and dimensions without prior notice
and can not be held responsible for the use of information contained in this software.

SULZER

Massblatt AS0830 S10/4 - S25/4

Dimension sheet

Plan d'encombrementt

No: AN-M 12.24 -02
Drawn: 18.07.97/C.Quirke
Issue Date: 22.02.02
Änderungen vorbehalten
Technical changes reserved
Con riserva di modifiche
Con reserva de modificaciones
Sous réserve de modification

50Hz	60Hz	H
S10/4	S10/4	437
S13/4	S16/4	437
S22/4	S25/4	450

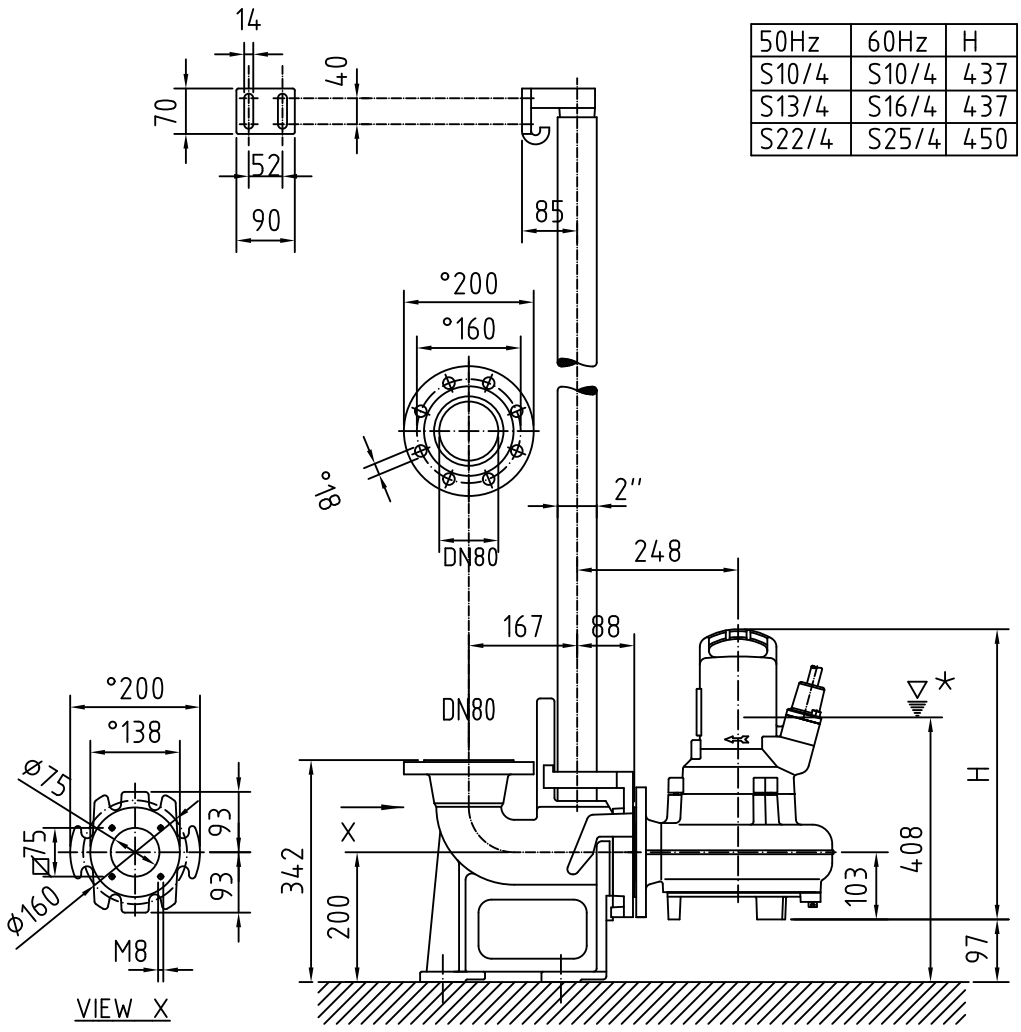

✳ LOWEST SWITCH OFF POINT FOR AUTOMATIC OPERATION

