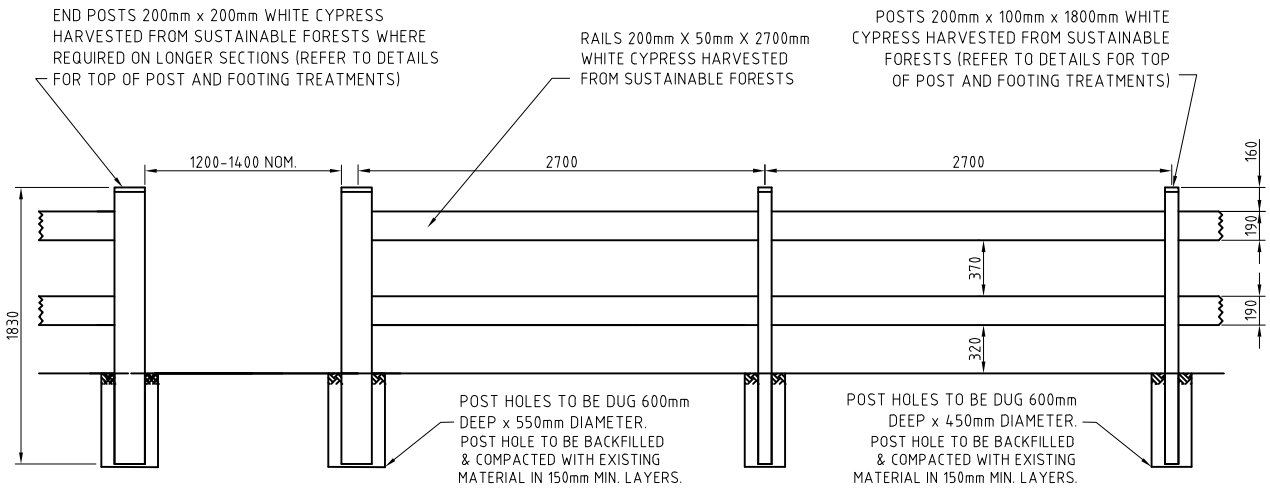


## TYPICAL SECTION (DOUBLE TIMBER RAIL)

**(N.T.S)**

POST HOLE TO BE BACKFILLED & COMPACTED WITH EXISTING MATERIAL IN 150mm MIN. LAYERS

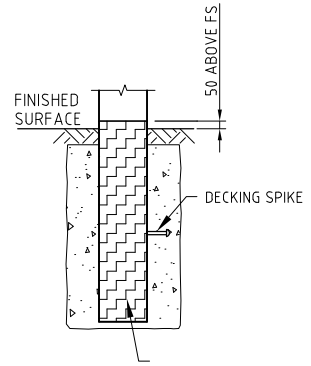


## CONCRETE FOOTING

25MPa STRENGTH CONCRETE
FOR USE IN HIGH VANDALISM AREAS

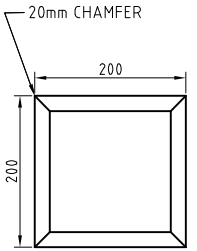


## TOP OF POST DETAIL (200x200 END POST) (TOP VIEW)

**(N.T.S)**

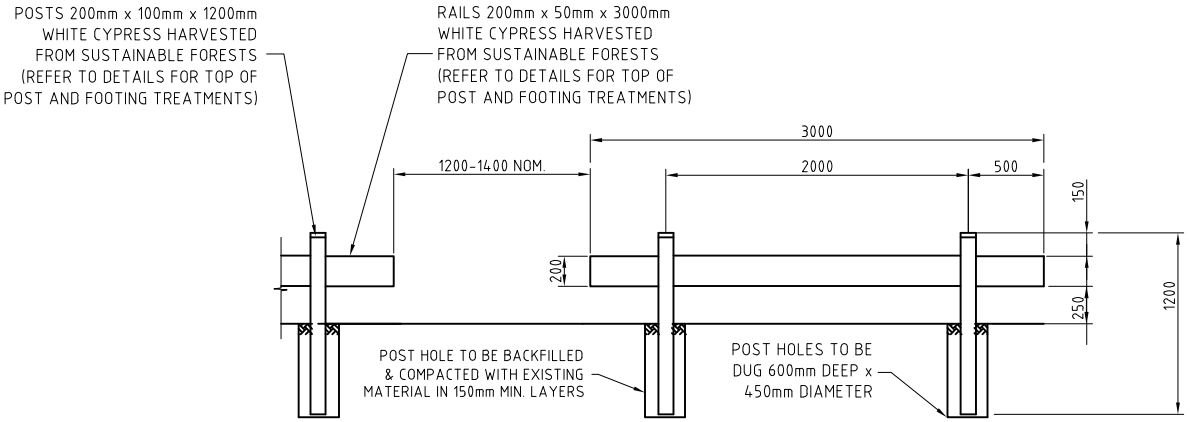


## TYPICAL SECTION (SINGLE TIMBER RAIL)

**(N.T.S)**

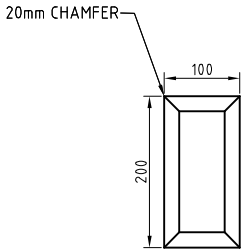


## TOP OF POST DETAIL (200x100 STANDARD POST) (TOP VIEW)

**(N.T.S)**

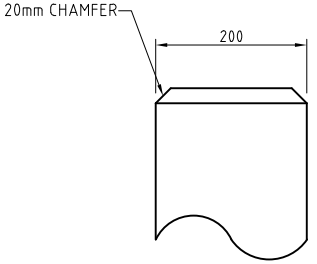


## TOP OF POST DETAIL (SIDE VIEW)

**(N.T.S)**

| VER | APPD. | DATE | AMENDMENT |
|---|---|---|---|
| 2 | | AUG 2017 | REVISED AND REISSUED |
| 1 | | OCT 2008 | ENDPOST SIZE INCREASED |
| 0 | | APR 2008 | REVISED AND REISSUED |

REFERENCES:

APPROVED:
V Shelton
Manager Engineering Services
Date: August 2017

CITY OF GREATER GEELONG
DESIGN UNIT
ENGINEERING SERVICES

STANDARD DETAIL

# TIMBER POST AND RAIL FENCE

DRAWING No: CGG709

AMENDMENT: 2