BS5837:2012 -Trees in relation to design, demolition and construction. AIA, AMS & TPP in relation to trees at 50 Chapel Street, Yaxley.

Prepared by: East Midlands Tree Surveys Ltd.

Date: 07/08/2025

Limitations of use and copyright: All rights in this report are reserved. No part of it may be reproduced or transmitted, in any form or by any means, electronic, mechanical, photocopying, recording or otherwise, or stored in any retrieval system of any nature, without our written permission. Its content and format are for the exclusive use of the addressee in dealing with this site. It may not be sold, lent, hired out or divulged to any third party not directly involved in this site without the written consent of East Midlands Tree Surveys.

Contents

1. Instructions 1
2. General information 1
2.1 Proposed development 1
2.2 Use of this document 1
3. Arboricultural Impact Assessment 1
3. Arboricultural Method Statement & Tree Protection detail. 2
3.1 Sequenced Methods of Demolition, Construction and Tree Protection 2
3.2 Phase 1 - Undertake Arboricultural Works 2
3.3 Phase 2 - Tree protection measures. 2
3.4 Mixing of concrete around trees. (cementitious, mortar, cement, slurry) 3
3.5 References 5
Appendix 1: Arb Impact Assessment Plan 6
Appendix 2: Tree protection plan 7
Appendix 3. Fence specification. 8
Appendix 4. Signs. 9

1. Instructions

This report was commissioned by TMV Architects in relation to trees at the above address with instruction to provide the following in line with *BS5837:2012 Trees in relation to design, demolition and construction - Recommendations.*

- An Arb Impact Assessment along with an Arb Method Statement and Tree Protection details.
- This document should be read in conjunction with the Tree Constraints report dated 13/05/25

2. General information

2.1 Proposed development

Construction of 2 small extensions to the existing property.

2.2 Use of this document

This document has been produced to assist key design and construction personnel in ensuring the satisfactory protection of all important trees present within the development site.

3. Arboricultural Impact Assessment.

See Appendix 1 for the Impact Assessment plans, Root Protection Areas in grey, crown spread in green along with shade pattern.

Physical build footprint.

The proposed layout shows that no trees need to be removed, and the gable end extension is outside the RPAs of the TPO trees.

T1 Ash however is in poor condition and appears to be in decline, as such it is suggested that this tree is removed, it has no public visual amenity.

In terms of G1, the proposed side extension is at a distance of just under 2m with most of this area under gravel, additional to this, there is a wooden dwarf retaining wall with a drop of approximately 0.5m. It is likely that roots will have been severed for the installation of this raised area and wall. See image below.



Ground protection measures/storage of materials

Materials will be stored on the drive.

3. Arboricultural Method Statement & Tree Protection detail.

3.1 Sequenced Methods of Demolition, Construction and Tree Protection

With reference to relevant published guidance, the methodology of this statement follows a logical sequence essential to the efficacy of the protection measures. Reference may include: British Standard BS 5837:2012 Trees in relation to design, demolition and construction – Recommendations; British Standard BS3998:2010 Tree Work. It is essential to the successful implementation of the principles set out in this document that effective supervision and enforcement are put in place from the outset.

3.2 Phase 1 - Undertake Arboricultural Works

Remove T1.

Tree work requires skilled operators to perform pruning tasks in order to maintain the health and safe useful life expectancy of the trees, it is strongly recommended that construction staff DO NOT carry out any tree works.

Additional to this, a legal Duty of Care requires that all works specified should be carried out by qualified arboricultural contractors who have been competency tested to determine their suitability for such works in line with Health and Safety Executive guidelines. All works should be carried out in accordance with British Standard BS3998:2010 Recommendations for Tree Work.

Particular care needs to be addressed in dealing with legally protected species such as nesting birds and roosting bats which are protected under the Wildlife and Countryside Act 1981 (as amended) from intentional harm and killing and applies to roosting and

hibernating bats and active bird nests. The protection of bird nests applies between mid-February to August inclusive.

3.3 Phase 2 - Tree protection measures.

The appointed Main Contractor will communicate to the appointed contractors and any subsequent subcontractors, the projected extents of the RPAs of the retained trees, having particular regard to those retained trees where anticipated landscaping incursions within their projected RPAs, are anticipated and/or protection measures are required.

Within site, the RPA of T3 will be marked clearly on the ground, using a non-toxic line marking paint at the extent of the projected RPA as per the distance on the Tree Protection Plan (TPP) at Appendix 2.

The fence will start on the boundary close to T1 and follow the existing wooden dwarf wall, from there it will extend up to the paint marked RPA of T3. (This run will protect the RPAs of both T2 and T3). From here the fence will run across the lawn to the boundary as indicated on the TPP.

Hard, to scale copies of the TPP will be retained by the Project/Site Manager and used to help communicate this aspect.

The fence will be erected as per the distances on Plan, if any layout issues arise with regards to the 3m panel lengths, the runs will be set back further from the RPAs, not within.

The aim will be for as much of the grey RPAs shown on the TPP to be protected as possible.

The fencing shall remain in place throughout construction and be removed only after completion of all works.

The default specification as per figure 2 of BS 5837:2012 will be used - see Appendix 3, in order to minimise the risk of damage to roots.

Within the fenced zone, no materials or chemicals should be stored at any time, no fires should be lit, no pedestrian or vehicle traffic, and level changes within these areas should be kept to an absolute minimum. Every effort should be taken to protect a maximum possible area of the root system.

Clear notices are to be fixed to the outside of the fencing with words such as

'TREE PROTECTION AREA – NO ACCESS OR WORKING WITHIN THIS AREA'.

See Appendix 4. These notices shall be A3 in size, laminated and fixed to the fencing using suitable aids such as tie wires.

3.4 Mixing of concrete around trees. (cementitious, mortar, cement, slurry)

Washout wastewater is caustic and considered corrosive, with a pH over 12. Wet concrete is toxic to trees and for this reason the incorporation of protection (sheathing with impermeable membrane e.g. heavy grade polythene sheeting) is extremely important to prevent contact with exposed roots and limiting potential for harm.

It is important NOT to mix concrete within the vicinity of trees where there is the risk of contamination of the soil.

A copy of the Tree protection Plan & Method Statement to be kept on site at all times.

An arboriculturist should be consulted where required during the construction process to address any issues that might arise regarding tree retention, protection, and management. It is the responsibility of the site owner, manager, and main contractor to ensure that any tree protection or other relevant planning conditions, or TPO's are adhered to. A breach of a planning condition or TPO may result in enforcement action by the LA.

It will be necessary to supervise the operation of tall or wide machinery such as booms or jibs during the installation work in proximity to the canopies of retained trees.

It is recommended that a pre-commencement meeting be arranged with the contractors who may be operating the machinery to address/overcome any concerns about close by branches and to organize further mitigating pruning if required.

NHBC guidelines on foundation depth in proximity to trees should be followed. This will be determined by a structural engineer but should be guided by information in this report and appropriate sampling to determine soil profiles at the site.



John Wilcockson – Director, East Midlands Tree Surveys LTD.

Tech Cert (Arbor A), NDF For

07/08/25

3.5 References

British Standards Institute. (2010). Recommendations for Tree Work BS3998:2010 BSI, London.

British Standards Institute. (2012). Trees in Relation to Design, Demolition and Construction - Recommendations BS5837:2012 BSI, London.

Ministry of Housing, Communities & Local Government. (2014). Tree Preservation Orders and trees in conservation areas. London: Ministry of Housing, Communities & Local Government.

Mattheck & Breloer, H. (1994). Research for Amenity Trees No.4: The Body Language of Trees, HMSO, London.

NHBC Standards (2007) Chapter 4.2 'Building Near Trees'. National House-Building Council.

NJUG 4 Guidelines for the planning, installation and maintenance of utility apparatus in proximity to trees. Issued 16 November 2007.

Forestry Commission (2007). Tree Felling - Getting Permission. Country Services Division, Forestry Commission, Edinburgh.

Patch, D. Holding, B. (2006) Arboricultural Practice Note 12 (APN12), Through the Trees to Development. Arboricultural Advisory and Information Service (AAIS).

Lonsdale, D. (1999). Research for Amenity Trees No 7: Principles of Tree Hazard Assessment and Management, HMSO, London.

National Tree Safety Group (2011). Common Sense Risk Management of Trees. Forestry Commission.

Appendix 1. Arb Impact Assessment Plan

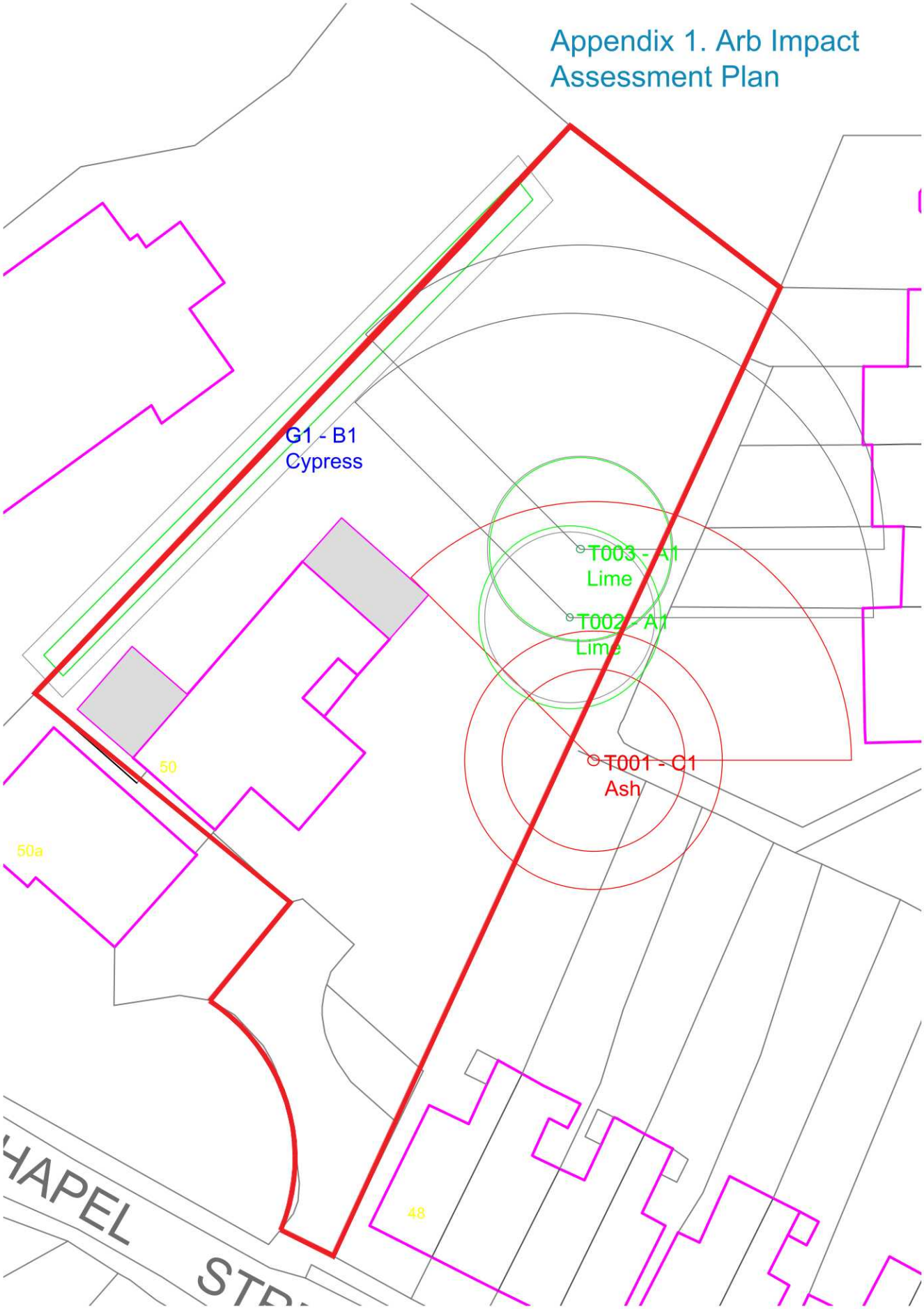


Appendix 2. Tree Protection Plan
Fence to terminate at the boundary edge or existing hard standing
G1 - B1 Cypress
Fence at edge of RPA - 5.6m
T003 - A1 Lime
T002 - A1 Lime
50
50a
Fence to follow the existing edge of the hard surfacing.

Appendix 3. Fence specification.

Figure 2 **Default specification for protective barrier**

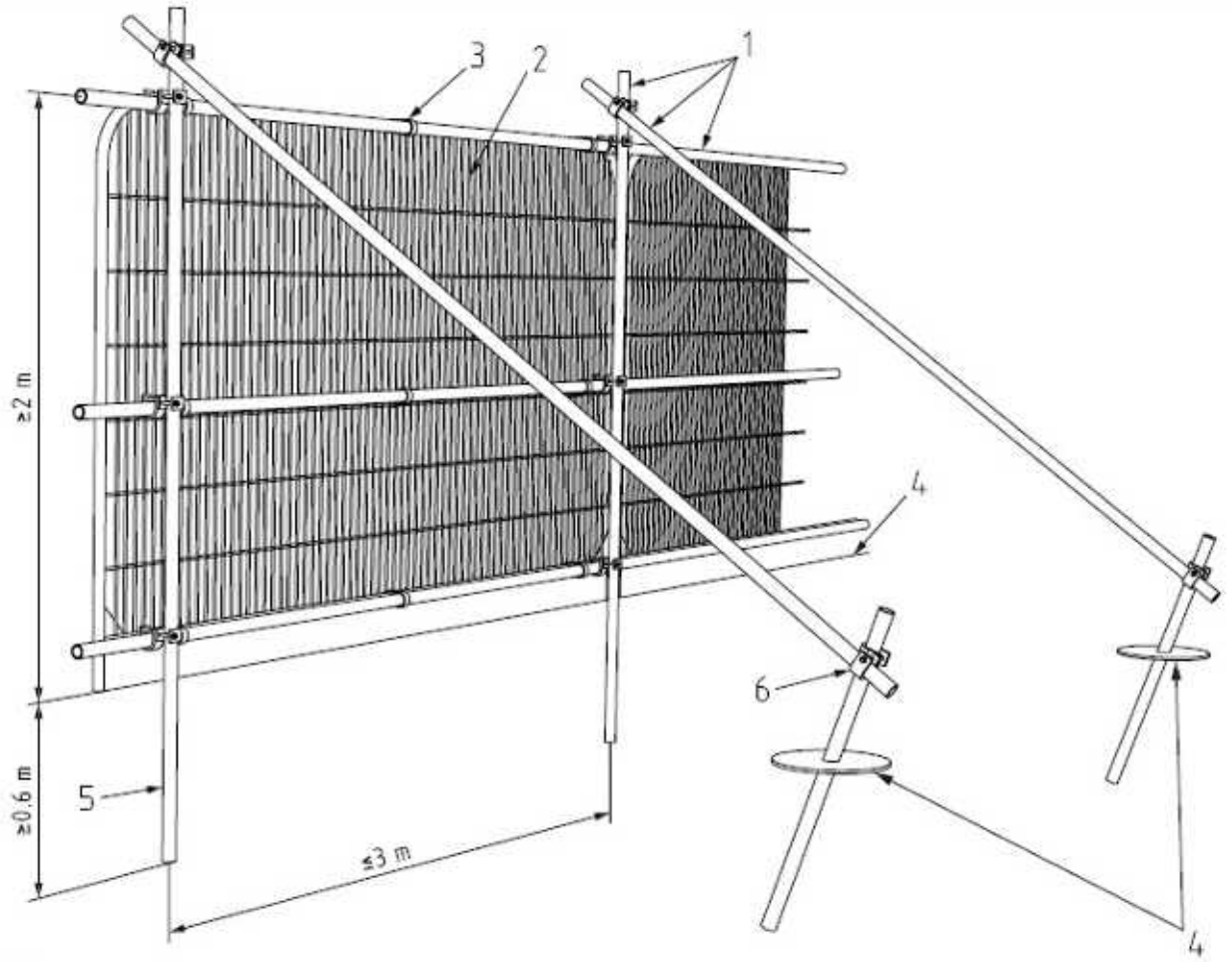

Key

1 Standard scaffold poles
2 Heavy gauge 2 m tall galvanized tube and welded mesh infill panels
3 Panels secured to uprights and cross-members with wire ties
4 Ground level
5 Uprights driven into the ground until secure (minimum depth 0.6 m)
6 Standard scaffold clamps

Appendix 4. Signs.

