0 0.5 1.0 2.0 3.0 4.0 5.0M

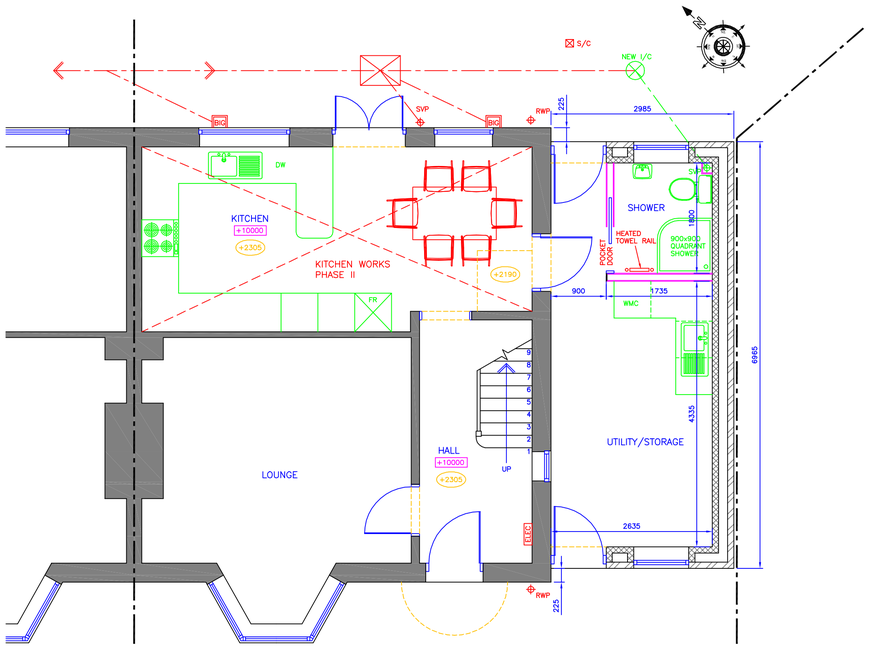

Proposed Ground Floor Layout Plan

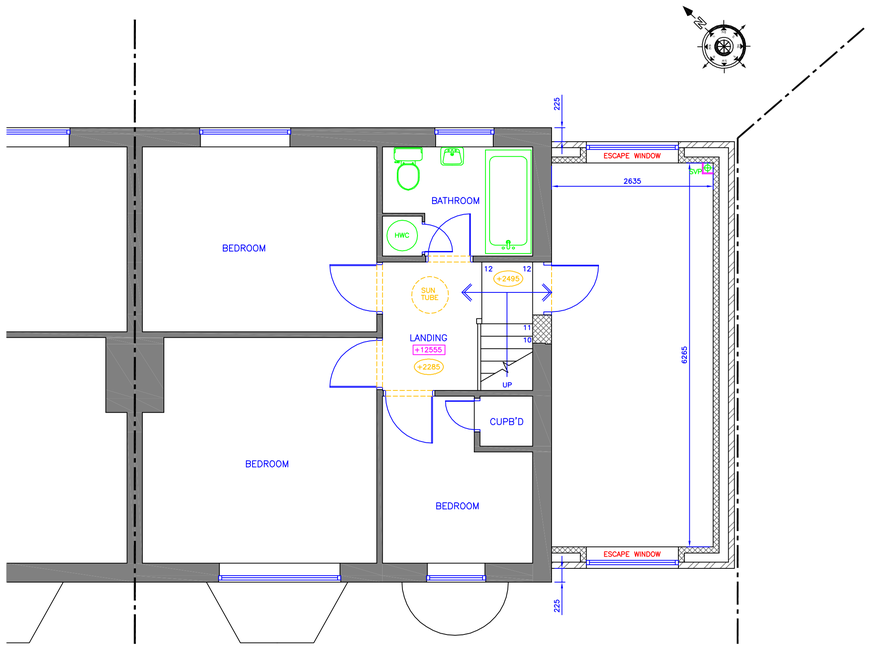

Proposed First Floor Layout Plan

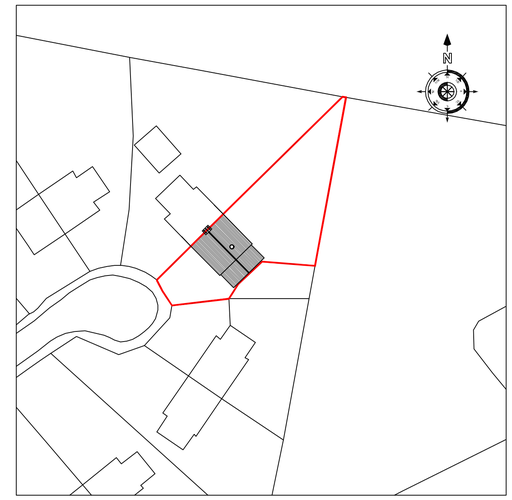

Block Plan 1:500

0 5 10 20 30 40 50M

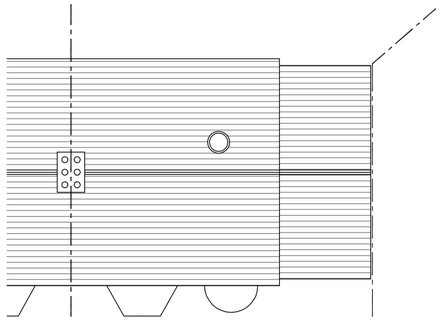

Proposed Roof Plan 1:100

0 0.5 1.0 2.0 3.0 4.0 5.0M



Proposed Southwest (Front) Elevation

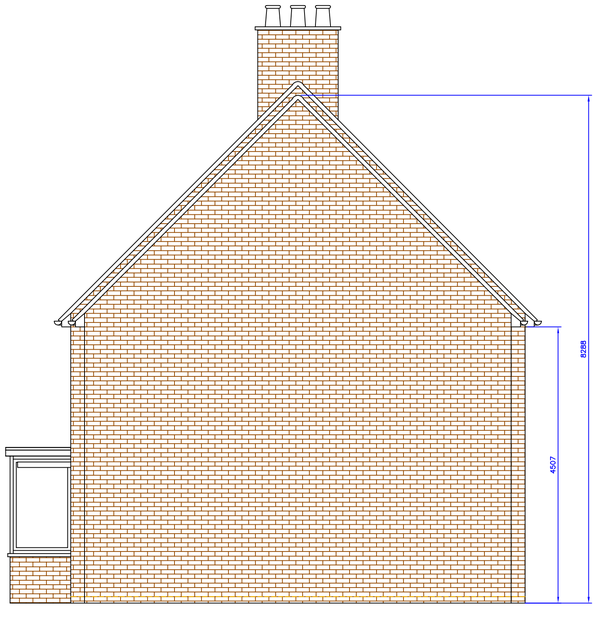

Proposed Southeast (Side) Elevation

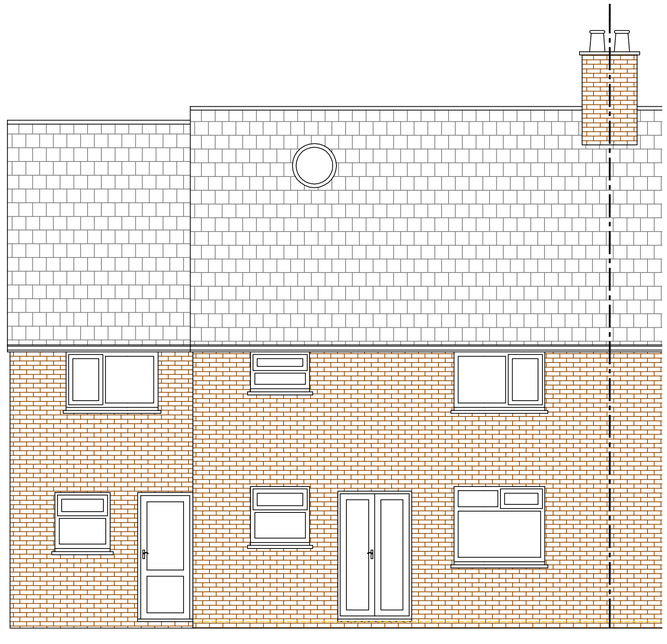

Proposed Northeast (Rear) Elevation

REV DESCRIPTION DATE BY

36 Longstanton Road
Over
Cambridgeshire
CB24 5PP
t. 07970 166 956
e. visualcreationslimited@gmail.com

CLIENT:	Dan & Zoe Allcock
PROJECT:	13 POUND CLOSE HAIL WESTON CAMBRIDGESHIRE PE19 5JT
TITLE:	PROPOSED LAYOUTS, ELEVATIONS ROOF & BLOCK PLANS
SCALE:	1:50@A1 WITH 1:100 & 1:500 INLAYS
DATE	12.11.2025
DRAWN BY:	P.W
CAD REF:	13PDCL-HAILW1-01b
DWG No :	13PDCL-HAILW1-02

DO NOT SCALE FROM THIS DRAWING. THIS DRAWING IS THE PROPERTY OF VISUAL CREATIONS Ltd. UNDER THE COPYRIGHT LAW NO COPIES OF THIS DRAWING CAN BE MADE UNLESS AUTHORISED.