

SOFT LANDSCAPED AREAS

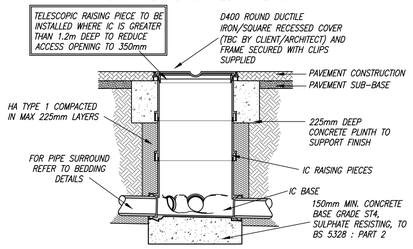

DRIVEWAYS/HARD LANDSCAPED AREAS

TYPICAL HEPWORTH UNIT SHOWN, EQUIVALENT APPROVED ACCEPTABLE TO BE INSTALLED IN ACCORDANCE WITH MANUFACTURERS RECOMMENDATIONS & SPECIFICATIONS

475ø POLYPROPYLENE INSPECTION CHAMBER (475ø PPIC)

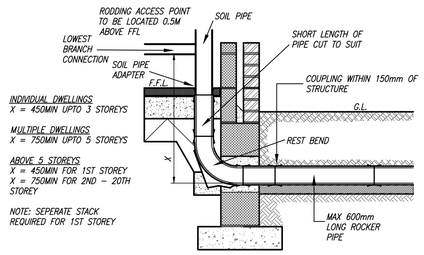

SOIL & VENT PIPE/STUB STACK/DURGO CONNECTION DETAIL

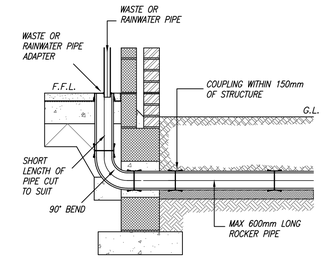

INTERNAL WASTE PIPE CONNECTION DETAIL

(SCALE 1:20)

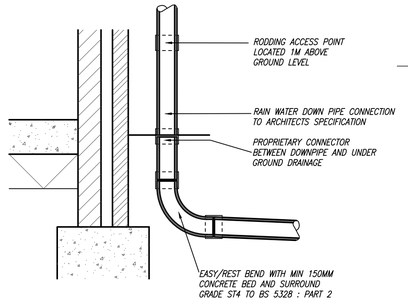

SEALED RAIN WATER DOWNPIPE

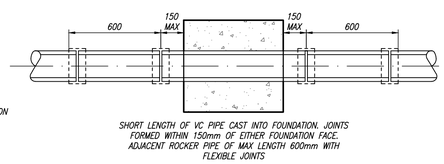

TYPICAL DETAIL FOR PIPE CAST INTO FOUNDATION

(SCALE 1:20)

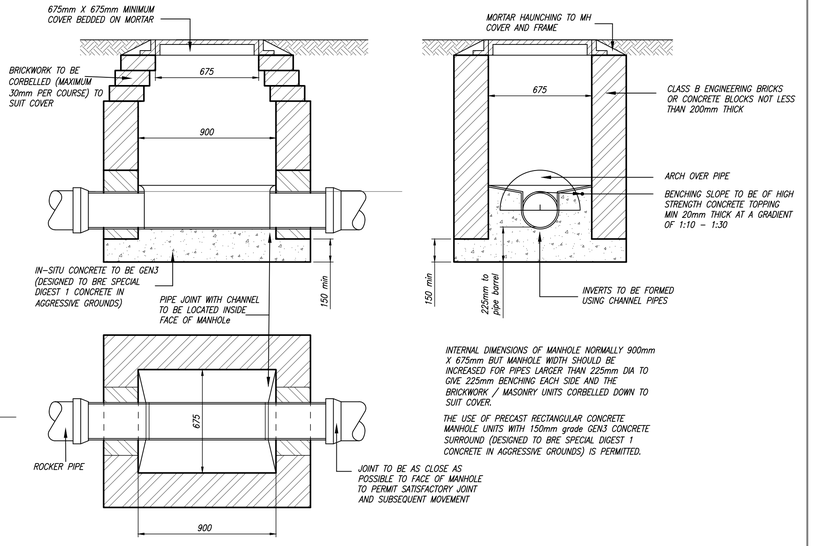

TYPICAL MANHOLE DETAIL – TYPE D

DEPTH FROM GROUND LEVEL TO SOFFIT OF PIPE LESS THAN 1.0m

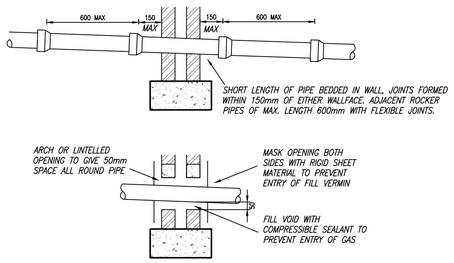

PIPES PENETRATING WALLS

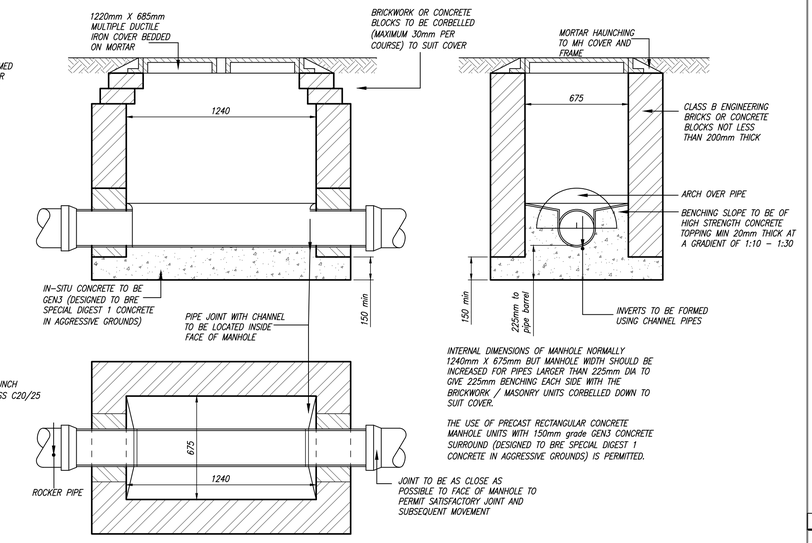

TYPICAL MANHOLE DETAIL – TYPE C

DEPTH FROM GROUND LEVEL TO SOFFIT OF PIPE 1.0m TO 1.5m

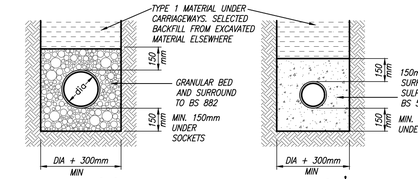

DRAINAGE WITH **MORE THAN** 600mm COVER – LANDSCAPED 900mm COVER – ROADS (UNLESS BEDDING TYPE IS STATED ON THE DRAINAGE PLANS OR SPECIFICATION)

DRAINAGE WITH **LESS THAN** 600mm COVER – LANDSCAPED 900mm COVER – ROADS (UNLESS BEDDING TYPE IS STATED ON THE DRAINAGE PLANS OR SPECIFICATION)

PIPE BEDDING DETAILS IN PRIVATE AREAS

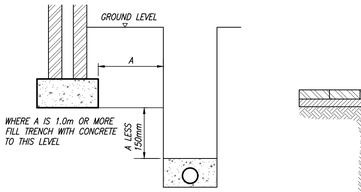

DRAINAGE NEAR BUILDINGS

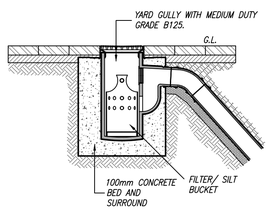

YARD GULLY

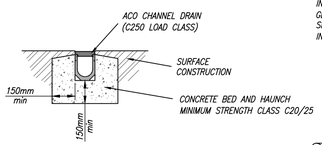

ACO CHANNEL DRAIN

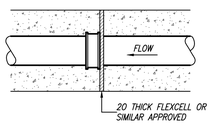

FLEXIBLE JOINT DETAIL FOR SLEEVED PIPES

(SCALE 1:20)

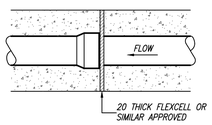

FLEXIBLE JOINT DETAIL FOR SOCKETED PIPES

(SCALE 1:20)

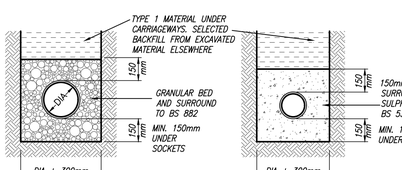

DRAINAGE WITH **MORE THAN** 900mm COVER – LANDSCAPED 1200mm COVER – ROADS (UNLESS BEDDING TYPE IS STATED ON THE DRAINAGE PLANS OR SPECIFICATION)

DRAINAGE WITH **LESS THAN** 900mm COVER – LANDSCAPED 1200mm COVER – ROADS (UNLESS BEDDING TYPE IS STATED ON THE DRAINAGE PLANS OR SPECIFICATION)

PIPE BEDDING DETAILS IN ADOPTED AREAS

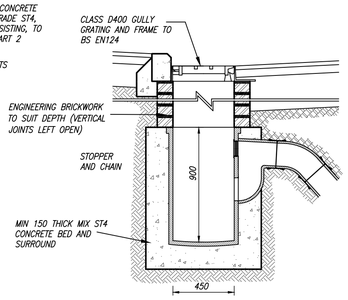

TRAPPED ROAD GULLY

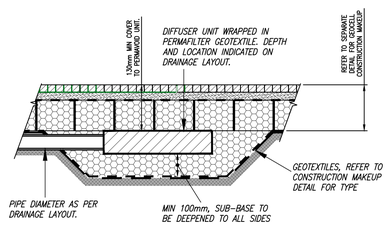

SW DIFFUSER OUTLET/INLET UNIT

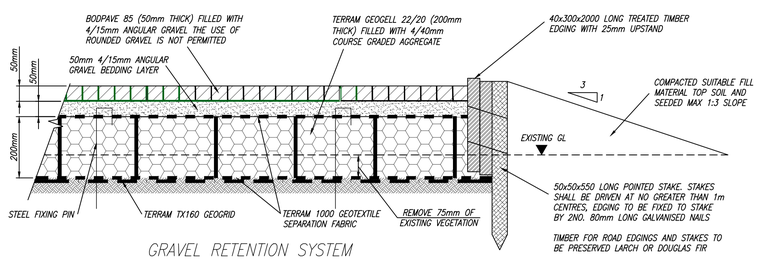

GRAVEL RETENTION SYSTEM ON GEOCELL TREE ROOT PROTECTION SYSTEM

TO BE INSTALLED IN ACCORDANCE WITH MANUFACTURES RECOMMENDATIONS AND SPECIFICATION

(2% CBR)

SCALE 1:10

Notes

1. This drawing is to be read in conjunction with all relevant Architects & Engineers drawings and specifications
2. Do not scale from this drawing

Rev	Date	Drwn	Chkd	Amendments
P01	30.07.21	SB	DS	ISSUED FOR COMMENT

Drawing Status: PRELIMINARY

SYMMETRYS
STRUCTURAL / CIVIL ENGINEERS
T 020 8340 4041 / E INFO@SYMMETRYS.COM / SYMMETRYS.COM / LONDON N8 8SL

Job Title
THE HOW
LAND TO THE SOUTH OF HOUGHTON ROAD
SAINT IVES

Drawing Title
CONSTRUCTION DETAILS
SHEET 1 OF 2

Project	Company	Zones	Level	Type	Role	Number
20108-	SYM	- XX -	XX -	DR -	C	- 550

Scale: 1:200 AT A1
Date: JUN 2021
Drawn By: SPB
Checked By: DS
Revision : P01

Company No. 5873122 VAT Registration No. 894 2993 61 Registered in England And Wales