SIMPLE PLANNING
SOLUTIONS

Planning Statement

Lawful development certificate for a new residential caravan at 16 Green End, Great Stukely, Huntingdon, Cambridgeshire, PE28 4AE



Image 1 from Google Earth showing 16 Green End Site

Project Number: URB/10/24/01

Date: Rev 1

Author: MH

Checked:

Table of Contents

1 Executive Summary 3

2 Introduction 4

2.1 Purpose 4

2.2 Proposal 4

2.3 Designations 4

2.4 Planning History 4

2.5 Consultations Undertaken 4

3 Proposed Development/Use 5

3.1 Site Location 5

3.2 Proposal 7

4 Legislation and Policy 10

4.1 Operational Development 10

4.2 Definition of a caravan 11

4.3 Certificates of Lawfulness 11

5 Case for the Applicant 13

5.1 A Question of Development 13

5.2 Construction Test 13

5.3 Mobility Test 13

5.4 Dimension Test 14

5.5 Change of Use of Land 14

6 Conclusion 15

7 Appendices 16

1 Executive Summary

This planning statement accompanies the application for a certificate of lawful development/use at 16 Green End, Great Stukeley, Huntingdon, PE28 4AE. It sets out the legislative framework against which the proposals are to be assessed and demonstrates how the proposed mobile home meets the relevant legislative criteria set out in the Town and Country Planning Act 1990: S192 (as amended by S10 of The Planning and Compensation Act 1991).

2 Introduction

2.1 Purpose

This application is made pursuant to Sections 191 and 192 of the Town and Country Planning Act 1990 (as amended) and relates to a certificate of lawful development (proposed) for a residential mobile home at 16 Green End.

2.2 Proposal

An application for a certificate of lawful development (proposed) for the siting of a mobile home on land at 16 Green End. This application seeks confirmation that the proposed caravan can be installed and used for residential purposes without planning permission.

2.3 Designations

The site is not a listed building and is not within a conservation area.

2.4 Planning History

An online search was undertaken but no relevant applications were identified.

2.5 Consultations Undertaken

No pre-application discussions have taken place.

3 Proposed Development/Use

3.1 Site Location

The application site is located to the southeast of Green End, behind a row of properties facing Green End itself. The main house is adjacent to a plot of land which is in the ownership of the applicant and has been since 1989. The site was used as an exercise area for the applicant's wife's horse and the land several buildings installed on there over this time.



Figure 1 Old stables building and green house with residential paraphernalia

The stables have not been used for equestrian purposes since 2010 and the old stable now serves as a wood store and general personal storage facility in connection with the main house. The land has been in use as personal garden land since 2010 for a mix of uses including growing of flowers, vegetables, and keeping some chickens, but all incidental to the use of the main dwellinghouse. There are no boundaries separating the curtilage from the rest of the garden land.



Figure 2 View from curtilage to garden land



Figure 3 Stable building front view



Figure 4 Back of stables building with compost bins and vegetable patches

3.2 Proposal

The application proposes the siting of a mobile home which falls within the definition of a caravan, by virtue of the Caravans Sites Act 1968. It would measure 6.7m in width, 16.7m in length; 2.4m to the eaves and 3.4m to the ridge (3.05m internally once ceiling and insulation is in). It would comprise of accommodation consisting of 2 bedrooms, a bathroom, a boot room, utility room and a living/diner and kitchen. It would be constructed mainly of timber and timber cladding and would be of high-quality appearance. It would sit on the 'Urban Plinth' layout system. The mobile home would be residential accommodation.

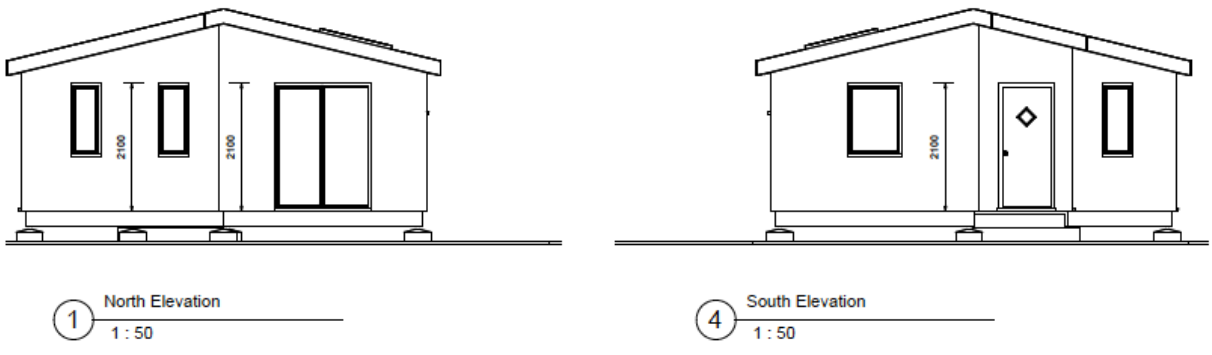

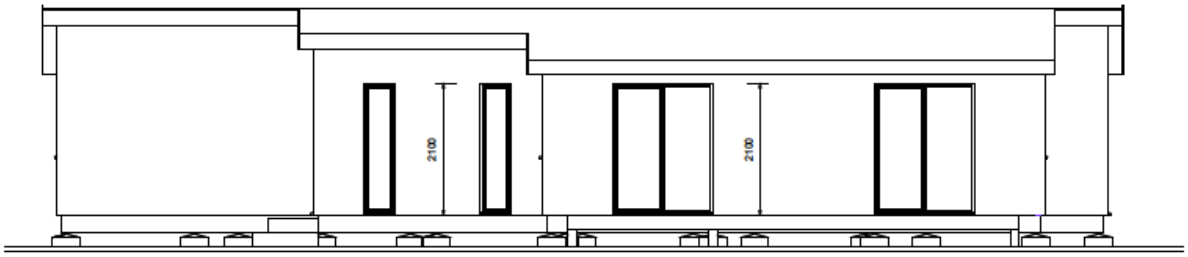

2 East Elevation
1 : 50

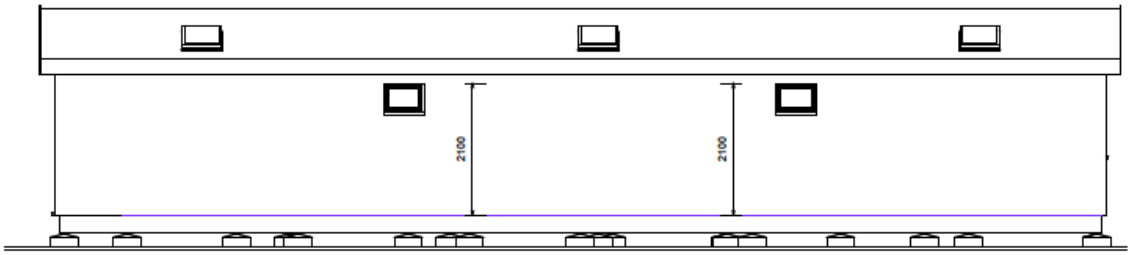

3 West Elevation
1 : 50

0 1 2 3

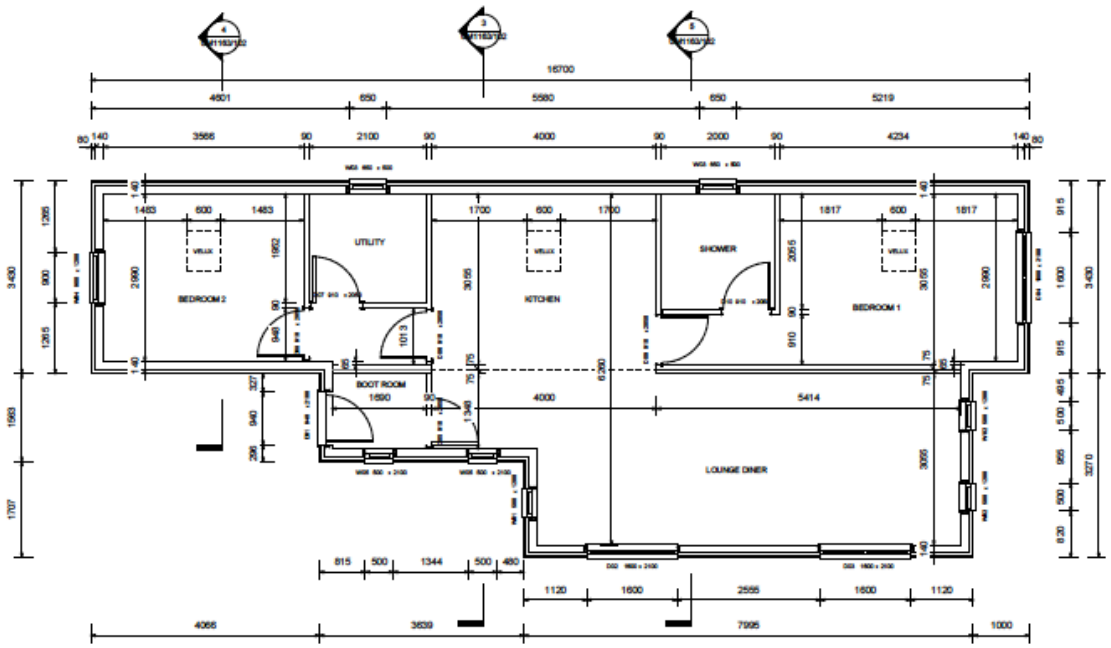

1 03 GF Walls
1 : 50



4 Legislation and Policy

4.1 Operational Development

Planning permission is only needed if the work being carried out meets the statutory definition of 'development' which is set out in section 55 of the Town and Country Planning Act 1990. There is often confusion when it comes to caravans, most commonly that their size, permanence, and physical attachment would be such that the siting of the unit would be 'operational development' as defined in Section 55 of the Act, rather than a use of the land.

'Development' includes:

- building operations (e.g. structural alterations, construction, rebuilding, most demolition);
- material changes of use of land and buildings;
- engineering operations (e.g. groundworks);
- mining operations;
- other operations normally undertaken by a person carrying on a business as a builder.
- subdivision of a building (including any part it) used as a dwellinghouse for use as 2 or more separate dwelling houses

The categories of work that do not amount to 'development' are set out in section 55(2) of the Town and Country Planning Act 1990. These include, but are not limited to the following:

- a change in the primary use of land or buildings, where the before and after use falls within the same use class;
- the use of any buildings or other land within the curtilage of a dwellinghouse for any purpose incidental to the enjoyment of the dwellinghouse as such

A common misjudgement in the assessment of the degree of permanence of a caravan within the curtilage of a dwelling, is the lack of intention to move the unit around the site. However, would apply to most "static" caravans on any lawful caravan site and is therefore intention does not and should not form part of the tests.

The question of permanence is also sometimes incorrectly applied when assessing whether a structure is a caravan. However, permanence is a matter of fact and degree that relates to physical attachment to the ground. The Urban Marque lodges are not permanently fixed to the ground, the details of construction are demonstrated in the "Urban Marque Planning Compliance Document"

appended to this application. There are myriad planning appeals and case law on the subject, some of which is cited throughout this document and referenced in the Appendices which highlight the relevant tests.

4.2 Definition of a caravan

There are **three tests** in the assessment of whether or not a structure can be considered a 'caravan'. The relevant legislation in relation to this case is the Caravan Sites and Control Development Act 1960 and the Caravan Sites Act 1968. Section 29(1) of the Caravan Sites and Control of Development Act 1960 defines a caravan as:

The definition of a caravan is contained within the Caravans Sites Act 1968 to include twin unit caravans provided that they meet the requirements of section 13(1). "A structure designed or adapted for human habitation which — (a) is composed of not more than two sections separately constructed and designed to be assembled on a site by means of bolts, clamps or other devices; and (b) is, when assembled, physically capable of being moved by road from one place to another (whether by being towed, or by being transported on a motor vehicle or trailer) and should be treated as a caravan even though it cannot legally be moved on the highway when so assembled."

Section 13(2) of the 1968 Act (as amended) also sets out the maximum dimensions for "twin unit caravans":

(a) length (exclusive of any drawbar): 20 metres

(b) width: 6.8 metres

(c) overall height of living accommodation (measured internally from the floor at the lowest level to the celling at the highest level): 3.05 metres.

Should the structure meet these three tests then it can be considered a 'caravan' by definition.

4.3 Certificates of Lawfulness

Town and Country Planning Act 1990: Section 191 and 192 as amended by section 10 of the Planning and Compensation Act 1991.

Town and Country Planning (General Development Procedure) Order (England) 2015

A Lawful Development Certificate is a legal document stating the lawfulness of past, present or future building use, operations, or other matters. If granted by the local planning authority, the certificate means that enforcement action cannot be carried out to the development referred to in the certificate.

However, the certificate will not protect from enforcement action by the planning authority if the specified use is then changed 'materially' without a planning application for it.

The certificate is not a planning permission. The planning merits of the use, operation or activity in the application are not relevant. The issue of a certificate depends entirely on factual evidence about the history and planning status of the building or other land and the interpretation of any relevant planning law or judicial authority. The responsibility is on the applicant to provide evidence to support the application.

Section 10 of the Planning and Compensation Act 1991 established a procedure that enables anyone who wishes to do so, to apply to the local planning authority to determine whether a proposed use or operation, or an existing operational development or an existing use of land, or any other matter constituting a failure to comply with any condition or limitation subject to which planning permission has been granted, is lawful, and if so, be granted a certificate to that effect.

A certificate granted for a proposed, or an existing use, operation or activity will specify (by reference to a plan or drawing) the area of land included in the certificate and describe the precise nature of the use, operation or activity which is lawful. The certificate will give the reason for determining the use or operation to be lawful and specify the date of the application for the certificate.

An application for a Lawful Development Certificate form should be used to establish whether:

• an existing use of land, or some operational development, or some activity in breach of a planning condition, is lawful;

• a proposed use of buildings or other land, or some operations proposed to be carried out in, on, over, or under land, would be lawful.

5 Case for the Applicant

5.1 A Question of Development

In making the assessment of this application the following matters need to be addressed:

- Does the proposal comprise operational development?
- Is the mobile home unit a caravan (s) within the legal definition?

The compliance of Urban Marque's mobile lodge park homes in relation to the above is set out in the "Urban Marque Planning Compliance Document' which has been submitted as part of the suite of documents but is summarised below. We have included some relevant case law to demonstrate the how the lodges comply with the legislation.

5.2 Construction Test

This test falls into two parts, firstly, are there more than two sections, and if not, are the sections "separately constructed and designed to be assembled on a site by means of bolts, clamps or other devices". The mobile home is constructed of two distinct parts, prior to assembly. It is then constructed on site on a temporary support system of plinths which are removable and re-usable should the unit be moved to another location.

In Byrne (Byrne v SSE & Arun DC (1997) 74 P&CR 420 – Appendix A), the court held that "if the process of construction was not by the creation of two separately constructed sections then joined together..." it was not a caravan. In Brightlingsea (Brightlingsea Haven Ltd and others v Morris and others [2008] EWHC 1928- Appendix B), a lodge that comprised of two parts brought to the site and then joined together was a caravan. The Urban Marque lodges comprise two sections and have to be constructed separately before being joined together on site. Therefore, the construction technique of the Urban Marque lodge complies with the Caravan Act Construction Test.

5.3 Mobility Test

"Twin unit" caravans by virtue of section 13 of the 1968 Act "shall not be treated as not being a caravan within the meaning of Part I of the Caravan Sites and Control of Development Act 1960 by reason only that it cannot lawfully be moved on a highway when assembled."

The Urban Marque Lodge is supported on raised plinths to enable beams to be inserted beneath in order for it to be lifted as a whole or in two parts by a crane from the site. Therefore, it meets the Caravan Act Mobility Test. Structural calculations are prepared by Thomas Consulting (Chartered

Structural Engineers) and a copy of their philosophy concerning the mobility test proof can be seen in the attached Urban Marque Planning Compliance detail included in this submission.

5.4 Dimension Test

There are strict dimensions for a structure to comply with the 'dimension test'; a 'caravan' must be:

(a) length (exclusive of any drawbar): 20 metres

(b) width: 6.8 metres

(c) overall height of living accommodation (measured internally from the floor at the lowest level to the celling at the highest level): 3.05 metres.

The submitted plans and elevations demonstrate that the Urban Marque lodge complies with these dimensions. Furthermore, the dimensions to be assessed are wall to wall and exclude projecting eaves or rainwater goods etc. In Brightlingsea (Brightlingsea Haven Ltd and others v Morris and others [2008] EWHC 1928) the court had to determine whether a lodge was a caravan for the purposes of the 1968 Act. In that case, as in this appeal, the wall to wall measurements were within the 6.8 limits but not if the eaves were included. The court held in paragraph 80 of the judgement, "if one is measuring the width of a structure such as the lodges, it is normal to take the wall measurements and to exclude the roof measurements. Secondly it seems to me to be more likely that Parliament would seek to control the wall measurements for width and length rather than the roof measurements."

5.5 Change of Use of Land

A 'planning unit' is a fundamental principle of planning law. It is defined by historical occupation, boundaries and ownership. Within a parcel of ownership there may be a number of different planning units. New planning units can be created where, for example, part of the original is occupied separately or a planning permission creates a new planning unit(s) by subdivision.

The land upon which the lodge is proposed is not domestic curtilage (it was purchased years after the initial dwelling No.16) but is attached to the curtilage and has been used as garden land incidental to the use of the main house for well over 10 years (see affidavit and letter from neighbour). It is not curtilage, but has been in use as domestic garden land and is now deemed along with the main dwelling, a single planning unit.

The stationing of a caravan on land is generally held to be a use of land. Whether or not that use amounts to a material change in the use of the land and thus development for which planning permission is necessary, requires an understanding of the planning unit in the first instance. If the

use of the planning unit does not change as a result of the development proposed and it remains a single planning unit, a material change in the use of the land is unlikely to occur.

The caravan would be occupied by the applicant's mother and father in law who are in old age and require a degree of day to support which the applicant and his wife will provide. The caravan will share all public utility services, facilities and the main house address. Meals and laundry will be undertaken in the main house.

6 Conclusion

The accommodation would meet the three tests of the Caravan Act, that is, the 'construction test', the 'mobility test' and the 'dimension test'. As such, it is demonstrated that the mobile home is not 'development' as defined by Section 55 of the Town and Country Planning Act 1990 and complies with the definition of a 'caravan' for the purposes of the Caravan Act 1968.

The accommodation will be in residential use by members of the family who will have care provided by those occupying the main house. As such, the proposal does not result in 'development' and will be functionally linked to the main dwelling. As the land comprises one planning unit with the main dwelling there will be no change of use of land. A certificate of lawful development/use should therefore be granted.

7 Appendices

APPENDIX A

BYRNE v. SECRETARY OF STATE FOR ENVIRONMENT and ARUN [1997] EWHC Admin 190 (27th February, 1997)

IN THE HIGH COURT OF JUSTICE CO 2803-96

QUEEN'S BENCH DIVISION
(CROWN OFFICE LIST)

Royal Courts of Justice
Strand
London WC2

Thursday, 27th February 1997

B e f o r e:

HIS HONOUR JUDGE RICH
(Sitting as a judge of the Queen's Bench Division)

- - - - - - -

BYRNE

-v-

THE SECRETARY OF STATE FOR THE ENVIRONMENT

and

ARUN

- - - - - - -

(Computer-aided Transcript of the Stenograph Notes of
Smith Bernal Reporting Limited, 180 Fleet Street,
London EC4A 2HD
Telephone No: 0171 831-3183
Fax No: 0171 831-8838
Official Shorthand Writers to the Court)

- - - - - - -

MR C BOYLE (instructed by Clarks, Reading RG1 1SX) appeared on behalf of the Applicant.

MISS N LIEVEN (instructed by The Treasury Solicitors) appeared on behalf of the Respondent.

J U D G M E N T
(As Approved)
Thursday, 27th February 1997

1. HIS HONOUR JUDGE RICH: Mr Boyle appears on behalf of the Applicant to quash the decision of the First Respondent of an enforcement notice served by the Second Respondent which, by its terms, requires the Applicant to remove a log cabin from their land.

2. The enforcement notice was served on the basis that the log cabin was to be treated as a caravan within the meaning of the Town and Country Planning Acts and therefore the use of the land by the stationing of it on the land was the development of which complaint should be made. The Inspector in upholding the notice, decided that the log cabin was not a caravan but a structure which had involved carrying out building operations on the land and, therefore, that the development to be complained of was operational development in respect of which the period for enforcement is a period of four years.

3. In the case of a change of use the period which makes unauthorised development common from enforcement action is ten years. If what was complained of was change of use, it would be possible in order to determine whether a change of use had taken place and when, to have regard to the presence on the land prior to the construction of the log cabin in 1994 of a succession of caravans. Accordingly, the view which the Inspector took as to the nature of the development affected the nature of his decision as to whether or not the time for taking enforcement action had passed; and if he was wrong in his identification of the nature of the development, it is accepted that the Applicant was prejudiced.

4. The difficulty in identifying the nature of the development arises from the statutory definition of "caravan". It is accepted that those statutory definitions contained in the Caravan Sites and Development Act 1960, and the Caravan Sites Act 1968 are to be treated, at least, for the purposes of this present application as the relevant definitions to be applied for the purposes of the Inspector's decision.

5. The 1960 Act had defined "caravan" as meaning:

"A structure designed or adapted for human habitation which-

(b) is... capable of being moved by road from one place to another (whether by being towed, or by being transported on a motor vehicle or trailer)."

6. The rest of the definition is not presently material. That definition raised problems in circumstances where it was physically practical to move a structure, but not lawful to take such

structure on the highway.

7. Section 13 of the 1968 Act, accordingly enacted as follows, the section is headed:

"Twin unit caravans .

(i) A structure designed or adapted for human habitation which-

(a) is composed of not more that two sections separately constructed and designed to be assembled on a site by means of bolts, clamps or other devices."

8. Pausing there, that subparagraph has been referred to as the "construction test". I continue reading:

"(b) is, when assembled, physically capable of being moved by road from one place to another (whether by being towed, or being transported on a motor vehicle or trailer)."

9. Pausing there, the second limb is referred to in this case as being the "mobility test": I continue reading:

"shall not be treated as not being a caravan within the meaning of Part I of the Caravan Sites and Control of Development Act 1960 by reason only that it cannot lawfully be moved on a highway when assembled."

10. The form of the 1968 Act therefore, is in effect a deeming provision to deem something which would not be treated within the meaning of the 1960 Act as "a caravan" as being "a caravan" if it satisfies firstly, the construction test and, secondly, the mobility test which mobility test is to be applied irrespective of whether or not it could lawfully be moved on the highway.

11. There is a provision in section 13(2) limiting the size of the structure which can thus be deemed to be a caravan, but it is accepted in this case, and the Inspector so found, that the structure which fell for his consideration was within the dimensions expressed as the limitation in section 13(2) of the 1968 Act.

12. The Inspector described the log cabin that had been erected on the site as follows:

"The log cabin is apparently recently built and is of wood construction, comprising horizontal interlocking timbers of oval rounded profile, vertically clamped by steel rods. It has a shallow pitched roof covered with felt tiles. There are verandas at the front, northern end, and at the rear, south east corner of the building. The structure is supported on concrete blocks resting on ground pads at regularly intervals."

13. He sets out the dimensions:

"The accommodation comprises a living area with integral kitchen, a bathroom and three bedrooms."

14. The Inspector concluded that the log cabin satisfied neither the construction test nor the mobility test. The Applicant complains that in so doing, he misconstrued the meaning of section 13 of the 1968 Act and/or alternatively, at least in respect of the mobility test, proceeded without evidence in reaching his conclusion.

15. Mr Boyle suggests that there are warnings of the erroneous approach of the Inspector in certain preliminary paragraphs leading to his decision on the two tests. He has concluded that the question which arises in the case, which he had to decide was:

"Whether the cabin satisfies the other criteria of the definition than those found in section 13(2)."

16. That definition, he goes on:

"..is to be found in section 13(1) of the Caravan Sites Act 1968 and elaborates on the definition of a caravan which is set out in section 29(1) of the Caravan Sites and Control of Development Act 1960."

17. Following that identification of the issue, he proceeded -- Mr Boyle indicates, that this shows his proclivity to fall into error-to consider the ordinary meaning of the word "caravan". In my judgment, although it may not be clearly expressed in the decision letter, all that the Inspector was doing was reverting before addressing section 13(1) of the 1968 Act to the provisions of section 29(1) of the 1960 Act which he had just said section 13(1) of the 1968 Act elaborated.

18. Nevertheless, it is apparent that he did have in his mind, before applying the tests in section 13(1) of the 1968 Act, a picture of a caravan ordinarily so-called. In paragraph 9 of his decision letter, he said:

"Turning to the statutory definition of a twin unit, which I understand to mean two caravans joined together, sub-section 13 (1)(a) of the 1969 Act describes a structure of not more that two sections separately constructed and designed to be assembled on site by means of bolts, clamps or other devices. When assembled it should physically be capable of being moved by road from one place to another (whether by being towed, or by being transported on a motor vehicle or trailer) and that it should be treated as a caravan even though it cannot legally be moved on the highway when so assembled."

19. That is a fair and proper paraphrase of section 13(1)(a) of the 1961 Act, save that there is interposed between his referring to his intention to look at the statutory definition of a twin unit and his doing so, the phrase "which I understand to mean two caravans joined together."

20. That without doubt was a misconception. There is nothing in the section, save only its heading "twin unit caravans", to indicate that the separately constructed sections which are a necessary ingredient of satisfying the construction test were to be each identifiable as caravans. I think that it may be that the Inspector did, in applying the test, have some confusion about that element. It does not however mean, that in the event he, in fact, applied the wrong test. I read paragraph 10 of his decision letter in order firstly, to indicate what he did say in reaching the conclusion that the construction test was not satisfied.

"The evidence in this case indicates that the log cabin was assembled on site from several components, and certainly more than two sections. It seems that individual logs or timbers were stacked on one another and finally compressed together by the use of straining rods to erect the walls. Rigidity for the structure is provided by laminated 'glulam' beams which run along the base of the walls and along the roof ridge line, linking to vertical beams in the centre of the gable ends (Plan A)."

21. Reference to "Plan A" is a reference to a manufacturer's plan which shows a section through the building indicating how the two sections of the building can be bolted together once positioned at ridge and subfloor level and indicates how the side walls are 75 millimetre doubled tongued and grooved walls fixed to a laminated edge beam and then bolted together by a 12 millimetre bolt through the walls.

"In theory", the Inspector went on in paragraph 10:
"at the meeting point of the two roof slopes and at the centre points of the gable ends, the structure is capable of being split into two parts. However there is no internal partition on the centre line of each

half which will expose the interiors of the two halves to the elements."

22. Pausing there, it is apparent that he is noting that the two separate halves into which, in theory, the cabin is capable of being split, would not themselves constitute separate structures designed or adapted for human habitation and thus it would not, if made up of two such sections, be made by two caravans being joined together. However, having made that observation, the Inspector continued:

"Moreover, it is clear from the evidence that this is not the way the log cabin was assembled on site. I therefore conclude that this structure does not comply with section 29(1) of the 1960 Act or section 13(1)(a) of the 1968 Act."

23. I read the sentence, "moreover, it is clear from the evidence that this is not the way the log cabin was assembled on site" as meaning that the bringing together of the theoretically separable parts having been separately constructed, is not the way in which the log cabin was in fact constructed.

24. The Notice of Motion criticises the Inspector's decision on this point by saying, that as it talks of the section being "designed to be assembled", the actual method of assembly in any given case is not conclusive. In my judgment, that construction of the section is mistaken.

25. Mr Boyle sought to support it by drawing to my attention that the paragraph refers to the structure as being "composed of not more than two sections... and designed to be assembled on a site by mean of bolts, clamps or other devices." I accept that if that was all that was required in order to satisfy the paragraph, it might be said that this structure was composed of not more that two sections, if one in some way ignored the fact that it was in fact composed of a very much larger number of sections, namely the separate logs and timbers to which the Inspector had referred. Certainly, it is designed to be composed into two sections, then to be bolted together as the paragraph requires, but this argument of Mr Boyle disregards two words in the paragraph which seem to me to be of importance. The requirement is that the structure should be composed of not more than two sections "separately constructed". That means, in my judgment, that it was an essential part of the construction process in order to bring a structure which would not otherwise be a caravan, within the definition of that which is to be deemed a caravan, that there should be two sections separately constructed which are then designed to be assembled on a site by means of bolts, clamps or other devices. If the process of construction was not by the creation of two separately constructed sections then joined together, the terms of the paragraph are not satisfied.

26. In my judgment, the Inspector was finding in the sentence to which I have drawn attention that it was not so constructed. I was at one stage, notwithstanding that no complaint is made of this point in a Notice of Motion, for myself somewhat concerned as to how the Inspector could have reached that conclusion. I think that I was improperly concerned, because it has not been suggested on behalf of the Applicant, that the Applicant sought to prove before the Inspector that the structure had been so composed out of two separately constructed sections. The burden, as Mr Boyle readily accepts, was upon the Applicant to satisfy the Inspector that the structure fell within the definition, if it was to be deemed, that it was a caravan.

27. On a proper understanding of the proof of evidence which has been exhibited before me, given by a building control surveyor on behalf of the Second Respondent, I do understand why it was right for the Inspector to reach the conclusion on the evidence, which he did reach. Mr Highward, over the time I was referring to, said that:

"The log cabin is a system/prefabricated structure. It is manufactured in several parts and designed to be assembled on site. The external skin of the log cabin, which is constructed on site, is a 'double-tongue and double-groove, special half-butt jointing and shaped interlocking' system."

28. That, as it appears to me, is the external skin consisting of the individual logs to which the

Inspector made reference, and it is separate from the structure whose rigidity is provided by the laminated glulam beams which run along the base of the walls and along the roof bridge line. So it appears that there were not at any stage two separately constructed sections which were then designed to be assembled and were assembled by means of bolts, clamps or other devices.

29. My concerns as to the justification for the sentence which decides as a matter of fact that the paragraph does not apply were, therefore, on reflection, unjustified. On a proper construction of the paragraph, the conclusion that the log cabin was not assembled on site out of two separately constructed sections, is conclusive that the paragraph does not apply and therefore the section does not operate to deem the structure as a caravan, and that is sufficient to uphold the Inspector's decision and to dismiss this Notice of Motion.

30. The Inspector, however, went on to find that the mobility test was not satisfied either. He did so in paragraph 11 of his decision letter as follows:

"Concerning the question of whether the structure is physically capable of being moved by road from one place to another, it is clearly impossible to tow it. I heard evidence from both sides about the practicality of moving it by motor vehicle or trailer. This included lifting by crane and jacking it up to enable a low-loader trailer to reverse under the log cabin. With regard to the first, the structure lacks lifting eyes or strong points for attaching strops and is of such mass and bulk that it may well be beyond safe lifting tolerances of many cranes capable of gaining access to this site. Jacking the structure would be a potentially complex procedure and, despite the claimed strength of the 'glulam' beams, would probably carry a very real risk of structural damage. In this respect I prefer the Council's evidence to that effect. Consequently I am satisfied that the structure also fails to satisfy the provisions of subsection 13(1)(b) of the 1968 Act."

31. Having made those specific findings however, the Inspector went on to give some explanation as to how he had arrived at them by the short observations that he made in paragraph 12:

"Having regard to all of the foregoing considerations, and to other evidence, including the manufacture's brochure and reports of conversations with them by the witnesses, I conclude, as a matter of fact and degree, that the structure on the site is not a twin unit caravan or mobile home and that it was constructed as a result of building operations as defined in section 55 of the 1990 Act."

32. The consideration of the mobility test in paragraph 11 clearly has regard to the movability of the structure from the particular site upon which it had been erected. This, Mr Boyle urges upon me, is an error of law, because, he says, what is to be considered is the nature of the structure rather than the circumstances of the structure in regard to the particular place where it has been erected.

33. I am uncertain what is the true construction of section 13(1)(b) in this respect. It appeared to me, when I read the paragraph at first, that the phrase "when assembled" is a clear indication that its mobility is to be tested by reference to the circumstances where and how it had in fact been assembled.

34. Mr Boyle submits and submits persuasively, that there is an alternative meaning of "when assembled", namely in its assembled state. He submits further, that since what is to be considered is whether it is capable of being moved by road from one place to another, it is not to be construed as meaning from the particular place where it has in fact been erected. That I find a highly persuasive argument and one which I would readily accept if I did not immediately recognise the source of the expression "one place to another" which is merely a repetition of the phrase which had been found already in the definition of section 29(1) of the 1960 Act.

35. I remain, therefore, inclined to the view, that the proper construction of the paragraph is that which I first gave it, namely that when assembled means when and as assembled in the state where

the question of whether or not it is to be deemed to be a caravan falls to be determined. I readily acknowledge that I may be wrong as to that construction of the paragraph, and it is therefore convenient that I should go on to consider, on the assumption that what is to be considered is the structure independent of its position, whether there would be reason to interfere with the Inspector's decision.

36. The Inspector by referring to the practicality of removing the structure by means of cranes capable of gaining access to the particular site was clearly, for himself, applying a test which would proceed, if I am mistaken in the construction of this paragraph, on a mistaken basis, but the conclusions that he has reached would appear to me to be equally applicable to the circumstances of this particular structure wherever it was placed.

37. The parties had agreed, as he recorded in the first sentence of paragraph 11, that it is clearly impossible to tow the structure. There was then apparently evidence as to the practicality of lifting it sufficiently to be able to place it on the back of a low-loader trailer in order then to move it as a complete unit by such means.

38. The Inspector addressed first the practicality of lifting by crane and secondly the practicality of lifting by jacking. He does not in terms, in paragraph 11 of his decision letter, deal with the problem of moving it once it was placed on the back of a trailer by either of those means of lifting. He does, however, in respect of jacking say:

"Jacking the structure would be a potentially complex procedure"

39. Within the limits of reasonable practicality, I accept Mr Boyle's observation that the complexity probably does not matter, but he goes on:

"... and, despite the claimed strength of the 'glulam' beams, would probably carry a very real risk of structural damage. In this respect I prefer the Council's evidence to that effect."

40. Now the Council's evidence as to the real risk of structural damage was not directed specifically to the circumstances of jacking: that is a complaint made on behalf of the Applicant as to the form of the decision. It is a factor that is specifically directed to the moving of the structure if it were once lifted, whether by jacking or by crane, and deposited on the back of a trailer.

41. Mr Highward said, and this is his evidence as it appears to me directed to the dangers of cracking:

"It appears to me that the log cabin is designed to remain static once constructed on site. Furthermore, due to the log cabin's size and design, it is not capable of being moved in one piece on the back of a motor vehicle or trailer if lifted and transported in its constructed state, the base would be likely to fracture and movement would be likely to cause a significant deterioration of some structural members and possibly the roof."

42. This evidence was apparently based upon conversations with the manufacturers, to which the Inspector made reference in paragraph 12 of his decision letter.

43. Mr Highward said:

"When I contacted the manufacturer, I was advised whilst the log cabin has lifting rings connected to the base they would not recommend it is moved using these rings or transported in one section. If it is necessary to move the log cabin they recommend that it is disassembled before hand on site, transported in its dismantled state and then reconstructed in its new position."

44. Although there does seem to me to be at least the potentiality of error in the reasoning which the Inspector applied to arrive at his conclusion that the mobility test is not satisfied, I am content he had evidence which he accepted, which would have led him to the same conclusion had he addressed himself not to the means of lifting the structure, but to the practicality of moving it once lifted, which is after all the test which he is required to apply under paragraph (b).

45. I have, in the passage which I have just read from Mr Highward's evidence, identified the fact that

46. Mr Highward refers to the existence of so-called "lifting rings" connected to the base of the structure. The Inspector had said, and the Applicant complains had said "without evidence" that the structure lacks lifting eyes or strong points for attaching strops.

47. The complaint as identified in the Notice of Motion was that the Inspector had found that there were no "lifting eyes or strong points for attaching strops", that was not his finding. His finding was, that it lacked such lifting eyes or strong points, and the lack seems to me to be a word apt to cover the situation which Mr Highward described of inadequate rings for the purpose of lifting, as much as the non-existence of rings and, therefore, it does not seem to me, that that particular observation in the Inspector's decision letter is an indication that he had made a finding for which there was no evidence.

48. For the reasons which I have given, the decision of the Inspector is sustainable by reason of his proper construction of the construction test. If it had been the case that I had reached the conclusion that the mobility test had been wrongly applied, I would still not have interfered with this decision and quashed it, because it appears to me clear on the evidence that was before the Inspector, and which evidence it is clear he accepted, that on applying such test as Mr Boyle would regard as unimpeachable his conclusion would be the same.

49. In those circumstances, and for those reasons, I reject this application.

50. MISS LIEVEN: My Lord, I ask for my costs.

51. MR BOYLE: I cannot resist that.

52. HIS HONOUR JUDGE RICH: Application dismissed with costs. Anything else I should properly deal with? Thank you both for your clear and helpful submissions.

Friday, 28th February 1997

53. MR BOYLE: If it please you, my Lord. My Lord, this is an application for leave against your Lordship's judgment of yesterday. My Lord will recall that I did not actually ask for leave after your Lordship gave judgment and did not address your Lordship as to leave to appeal to the Court of Appeal.

54. My Lord, I am obliged you can deal with it now. My Lord, it will be apparent from the case how important this matter is to those instructing me. The way my Lord decided the case will have the effect of removing this structure wherever it may be, removing the house of those who occupy it, or indeed that they face criminal sanctions.

55. There is, my Lord, of course, a much more general question of importance and that is, as I submitted yesterday, without authority on the point----

56. HIS HONOUR JUDGE RICH: The mobility point is certainly an arguable point, but as it is not critical if I am right on the construction point which, as a matter of fact which was found against you, I do not think I can give leave.

57. MR BOYLE: My Lord, I would submit to you, my Lord, that both on construction and mobility, with the greatest of respect, your Lordship made an error in law.

58. HIS HONOUR JUDGE RICH: If you can identify the error of law that I made on the construction issue, you might persuade me. What I thought I was doing was finding that the Inspector had made a decision of fact.

59. MR BOYLE: My Lord, on the construction matter, the way it was put in argument before you was such as to say that the design of the caravan was the most important matter.

60. HIS HONOUR JUDGE RICH: You conceded that that could not be conclusive, but what was determinative was how it was actually assembled.

61. MR BOYLE: Certainly in argument before your Lordship, I had argued that the way in which the Inspector came to his conclusion showed that he accepted that the design was such as to be in two parts, but in that case the two parts not constructed, but that he confused----

62. HIS HONOUR JUDGE RICH: The whole was not constructed by the method of first having two separate parts and then....

63. MR BOYLE: My Lord, that was a possible reading of his decision letter but, my Lord, I would submit that that is not the correct reading of his decision letter but, in fact, what he was finding was that the structure was put together from bits and pieces, but he accepted that those bits and pieces went to make the two parts -- the two parts went to make the whole as was the design of the caravan structure.

64. HIS HONOUR JUDGE RICH: Mr Boyle, by your very considerable charm, you succeeded in persuading me that there should be an opportunity for a full hearing. You have had your full hearing. If the Court of Appeal can be similarly charmed if they think there should be another full hearing good luck to you. I do not give you leave.

MR BOYLE: Thank you.

© 1997 Crown Copyright

BAILII: Copyright Policy | Disclaimers | Privacy Policy | Feedback | Donate to BAILII
URL: *http://www.bailii.org/ew/cases/EWHC/Admin/1997/190.html*

APPENDIX B

All England Official Transcripts (1997-2008)

Brightlingsea Haven Ltd and another v Morris and others

Landlord and tenant - Tenancy - Tenancy distinguished from licence - First claimant submitting defendants having periodic tenancies terminable on notice in respect of lodges in question - Defendant arguing that leases should be granted in respect of lodges on basis of equitable right - Whether defendant having security of tenure

[2008] EWHC 1928 (QB)

HQ07X02327, 02328, 02329, (Transcript)

QUEEN'S BENCH DIVISION

JACK J

7, 8, 9, 10, 11, 14, 15, 16, 17 JULY, 30 OCTOBER 2008

30 OCTOBER 2008

This is a signed judgment handed down by the judge, with a direction that no further record or transcript need be made pursuant to Practice Direction 6.1 to Pt 39 of the Civil Procedure Rules (formerly RSC Ord 59, r (1)(f), Ord 68, r 1). See Practice Note dated 9 July 1990, [1990] 2 All ER 1024.

A Tanney for the Claimants

S Cottle for the First and Second Defendants

D Schmitz for the Third Defendant

Ellisons Solicitors; Shelter Legal Services; Bar Pro Bono Unit

JACK J:

INTRODUCTION

[1] Brightlingsea lies at the mouth of the Colne estuary in Essex and is one of the Cinque Ports. Haven Village, or Brightlingsea Leisure Village as it is also called, is a caravan park on the edge of the town. The park contains both caravans in the colloquial sense and lodges, a lodge being what is often called a mobile home - though the mobility is very limited. Both may come within the definition of "caravan" in law. The impression given to a visitor is of a grassy area within a low earthen sea wall containing 40 or 50 chalets or lodges, some finished in wood, some rendered. There are also a number of large caravans. All of these are permanently sited on the park. There is a site office and a small house for the warden. A tarmac drive leads

round from a parking area at the entrance. This case concerns rights between the park owners and the three Defendants in respect of their lodges. The outcome will affect a number of other lodge owners.

[2] The First Claimant, Brightlingsea Haven Ltd, "'BHL", is the tenant of the park under a lease granted by the freeholder, Brightlingsea Town Council. The lease is dated 9 May 2000 and is for a term of 30 years commencing on 9 November 1989 and so expiring in 2019. The commencement date is the date of an agreement between the same parties for the grant of the lease. It is unclear how soon after November 1989 BHL took possession of the site. Nor is it clear why the execution of a lease was so delayed. Schedule 5 of the lease contains a number of covenants by BHL. The relevant covenants are:

> "by clause 7(a), to observe, inter alia, any consents and licences issued under Act of Parliament;
>
> by clause 10(a), to comply with the Planning Acts and all consents issued thereunder;
>
> by clause 11(b), not to use the park 'otherwise than as a Static Seasonal Caravan Park';
>
> by clause 12(a) to 'comply with the 'standards to be imposed as a condition of Licence' by virtue of the Caravan Sites & Control of Development Act 1960';
>
> by clause 12(b), not to allow caravans or mobile homes on the park to be occupied, except for storage, other than between 1 March and 31 October, 12 noon on Fridays to 12 noon on Mondays at other times, and ten days over Christmas and New Year;
>
> by clause 13(b), not to underlet nor part with possession save by way of a standard licence for each caravan."

[3] The first site licence for the park issued under s 3 of the Caravan Sites and Control of Development Act 1960, "the 1960 Act", is dated 29 September 1993. It was issued to the Second Claimant, Hammerton Leisure Ltd, "HLL", by Tendring District Council. That was an error, because the "occupier" of the park was and is BHL. No complaint has ever been made by Tendring. Both companies are controlled by Mr Stephen Hammerton and his family. Mr Hammerton is managing director of each. Among the conditions of the licence were conditions, first, that only approved caravans as defined in s 29(1) of the 1960 Act and in s 13(1) of the Caravan Act 1968, "the 1968 Act", were permitted on site, and, second, that caravans might be occupied only between 1 March to 30 November, and over any weekend, and over ten days at Christmas. The November date was more generous than the lease by a month. The current site licence was issued to BHL on 4 May 2007. It contains the same conditions. I will refer to the dates during which "caravans" may not be occupied as "the closed period".

[4] Planning permission had been granted on 28 September 1989 by Tendring District Council on the application of Brightlingsea Town Council, for change of use from "amenity land to seasonal caravan park". It was a condition of the permission as varied on appeal by a determination dated 4 January 1995 that caravans should only be occupied on the dates which were later set out in the site licences. The reason stated for the condition was to ensure that the caravans remained in holiday use. The success of the appeal must provide the explanation for the divergence between the lease and the site licence as to dates of permissible occupation.

[5] The Defendants' case is that they bought their lodges from HLL (or in the case of the Second Defendant from the original purchaser from HLL) on the strength of promises that they would be granted leases of their sites by BHL until the end of BHL's lease from Brightlingsea as it might be extended, and that, although they could not sleep in the lodges during the closed period, they could use them during the day in that period. They were selling their homes in order to buy their lodges, which was known to BHL. Those promises, they submit, give them rights in equity against BHL, which should be met by the grant of leases on those terms.

The matter of day time occupation in the closed period is of great importance because if they use bed and breakfast accommodation during the closed period they must have somewhere to go during the day, and the position may not be much different if they lodge with a relative or friend. BHL's case is that they have only periodic tenancies, terminable on notice, with a term that they cannot use them for occupation during the closed period either by day or night. The determination of the Defendants' rights is of importance not only to the parties but to other lodge owners who occupy their lodges as their homes. The Defendants seek primarily a declaration as to their rights. BHL seeks an injunction preventing them from occupying their lodges during the day in the closed period,

[6] If the Defendants are correct as to the rights they can assert against BHL, the assertion of those rights would appear to put BHL in breach of its lease, the site licence and the terms of the planning permission. That creates difficulties which go beyond the determination of the rights themselves.

[7] The underlying cause of the problems is the manner in which Mr Hammerton chose to deal with the rights between BHL and the lodge owners. Although no evidence was called to establish this directly, it appears from the evidence that I heard that it is usual for a licence agreement relating to use of the site (or pitch) to be signed by the park owner and by the lodge purchaser prior to or at the same time as a lodge is purchased. The National Caravan Council and the British Holiday & Home Parks Association have jointly promoted a form of licence since the mid 1990s. If this course had been adopted, the purchasers of lodges would have seen the intended terms on which they were to hold their sites before they committed themselves, including any term that occupation during the closed period was prohibited. There would have been no breach of the head lease by subletting, and there should have been no problems. For either the purchasers would not have purchased, or they would have purchased knowing where they stood. However, in July 1990 Mr Hammerton had procured from BHL's solicitors, Ellisons, a form of lease to be used at Haven Village. It provided for the tenant to hold his site for a term of years (the term was left blank by Ellisons), at a variable rent with covenants only to use the lodge as a domestic holiday lodge, and during December to February to use it only at weekends and for ten days over Christmas and the New Year. It was Mr Hammerton's practice to provide a copy of such a lease to a purchaser some time after the purchase of the lodge and the purchaser had moved in. It was not seen by the purchaser until then: in particular it was not shown to a purchaser prior to purchase. The "lease" delivered to the purchaser would be signed on behalf of BHL prior to delivery. Mr Hammerton did not think it necessary to get it signed by the tenant. It is not surprising that it is not sought to rely on these "leases" in these actions. I will record here that none of the Defendants had solicitors acting for them in connection with the purchases of their lodges and the arrangements relating to their sites. Nor did they have legal advice. That was also the case in relation to the other residents of Haven Village who gave evidence. I deduce that because they were not buying houses or flats they saw no need. They were, of course, unwise not to ask to see the terms of the lease which they were told they would get. None of the Defendants or witnesses did so. They did not do so because they trusted what they were told and because of a lack of commercial sophistication.

[8] In addition to the matters I have referred to there are issues as to the rent which BHL is entitled to charge, and there are claims against BHL for damages for harassment under s 3 of the Protection from Harassment Act 1997.

[9] The Claimants have been represented by Mr Anthony Tanney instructed by Ellisons. The First and Second Defendants, Mrs Morris and Mr Foster, have been represented by Mr Stephen Cottle on the instruction of Shelter Legal Services. The Third Defendant, Mr Richard Clark, died on 29 September 2008. He was aged 71 and had suffered from mesothelioma. Written submissions were made on his behalf by Mr David Schmitz acting pro bono, which adopted and added to those of Mr Cottle. Mr Schmitz also prepared for Mr Clark a third witness statement. Subsequently Mr Schmitz like other counsel also provided written submissions in September 2008 as to the effect of the decision of the House of Lords in *Yeoman's Row Management Ltd v Cobbe* [2008] UKHL 55, [2008] 1 WLR 1752, [2008] 35 EG 142. The opinions were delivered on 30 July 2008. That was after the conclusion of the trial on 16 July 2008. I am grateful to Mr Schmitz for his help. By reason of his poor health Mr Clark did not attend the trial in London. He gave

evidence in Colchester together with other of the Defendants' witnesses who could not get to London. I also then gave him the opportunity to address me about the case, which he did briefly in trenchant terms. In these circumstances I can refer to the submissions of Mr Cottle as being those of all three Defendants.

TWO PRELIMINARY MATTERS

[10] Two points have been raised on behalf of the Defendants, which relate to the statutory regime governing the Defendants' lodges. One submission is that the Defendants' lodges are not "caravans" within the meaning of the legislation. The other is that despite the existence of the closed period the site is a "protected site" as defined by the 1968 Act.

[11] The issue as to whether or the lodges are "caravans" is raised by the Defendants in an attempt to avoid the problem that may be caused to them by s 9(1) of the 1960 Act. Section 9(1) makes it a criminal offence for an occupier of land to fail to comply with any condition attached to a site licence. The offence is punishable on summary conviction by a fine not exceeding level 4 on the standard scale - £2,500. The conditions of the site licence have been broken by the occupation by the Defendants during the closed period both by day and, following the dispute as to day occupation, by night. BHL say that the enforcement of a right to daytime occupation in the closed period would involve further criminal offences, and therefore, the right should not be enforced. The Defendants thus see it as advantageous to argue that their lodges are not caravans as defined by the Acts. They would then be moveable dwellings requiring a licence under s 269 of the Public Health Act 1936, which, it is submitted, Tendring would be bound to grant. It is also submitted that in these circumstances planning permission would cease to be a problem. So the point appeared to be raised reluctantly in order to defeat the suggestion of illegality, and it was submitted also that it might not be necessary to determine it at this stage. Nonetheless the point was fully covered in the evidence and in submissions. It is relevant to the other issues and it is important that the parties know where they stand on it. I must determine it. I am satisfied that the lodges are "caravans" within the Acts. I will give my reasons at the end of the judgment.

[12] I turn to the question of whether Haven Village is a "protected site". Part I of the 1968 Act makes a distinction between holiday sites and "protected sites" as defined by s 1(2) of the 1968 Act. Section 1(2) provides that:

> ". . . a protected site is any land in respect of which a site licence is required under Part 1 of [the 1960 Act] . . . not being land in respect of which the relevant planning permission or site licence -
>
> (a) is expressed to be granted for holiday use only; or
>
> (b) is otherwise so expressed or subject to such conditions that there are times of the year when no caravan may be stationed on the land for human habitation."

The Act provides protection from eviction and harassment. The Mobile Homes Act 1983, "the 1983 Act", provides for the occupier of a mobile home on a protected site to have an agreement to station the home on the site in terms set out in Sch 1 to the Act, which gives considerable security of tenure. By s 5(i) "mobile home" has the same meaning as "caravan" in the 1960 Act. The question is whether the terms of either the planning permission or the site licence for Haven Village fall within either (a) or (b) of s 1(2).

[13] Mr Tanney submitted for the Claimants that the condition of the site licence that caravans might only be occupied in the specified periods fell within s 1(2)(b). Mr Cottle submitted that the subsection was to be construed as referring to provisions which required caravans for human habitation not to be on the land, that is, to be removed. I consider that it is to be construed as referring to a provision that, at times, caravans shall not be stationed on the land for, meaning "'for the purpose of", human habitation at those times. They may be stationed on the land at those times for other purposes, one obvious purpose being to await habitation

outside those times. That is the natural meaning of the words. Further, as caravans are by definition in s 29(1) of the 1960 Act and in s 13(1) "designed or adapted for human habitation", the reference to human habitation is unnecessary if Mr Cottle's construction is correct. Thirdly, Mr Cottle's construction means that no such provision could be imposed in a site licence because it would be for an impermissible purpose according to the decision of the Court of Appeal in *Babbage v North Norfolk District Council* (1990) 88 LGR 235, 154 JP 257, [1990] 1 EGLR 202.

[14] In *Babbage* the court considered the proper exercise of the power to insert conditions in site licences given by s 5 of the 1960 Act. The site licence contained two relevant conditions. One required that no caravan should be occupied between November 1 and March 19. The second required that all caravans should be removed prior to 1 November and none placed before March 20. Section 5(1) permits conditions:

> "(a) for restricting the occasions on which caravans are stationed on the land for the purposes of human habitation, . . .
>
> . . .
>
> (d) for securing the taking of any steps for preserving or enhancing the amenity of the land, including the planting and replanting thereof with trees and bushes."

The court applied previous authority to hold that s 5 did not permit conditions which were imposed for purely planning reasons. It held that the condition requiring removal could not be justified under either s 5(1)(a) or (d). It was imposed as a planning consideration. The condition as to occupation was not in issue on the appeal.

[15] Mr Tanney submitted that condition 3 of the planning permission relating to the times when caravans might be occupied also fell within s 1(2)(b). For the same reasons I accept that to be correct. The terms of both the site licence and planning permission therefore fall within s 1(2)(b) and so the park is not a "protected site".

WERE PROMISES MADE TO THE DEFENDANTS AND IN WHAT TERMS?

[16] Mrs Marion Pollard was the manager of the park between May 1991 and January 2004. She was succeeded by Mr Colin Myson. The Defendants' rights in connection with their lodges depend on what Mrs Pollard said to the first and Third Defendants, Mrs Morris and Mr Clark, when they were considering buying their lodges, and on what Mr Myson said to the Second Defendant when he was considering buying his. It is accepted that Mrs Pollard and Mr Myson had authority to speak on behalf of BHL if they said what they are alleged to have said: no questions arise as to their authority.

[17] I will begin with the events relating to Mrs Morris, taking those which relate specifically to her and then also taking the more general history forward in so far as is necessary. I will then return to cover the events relating specifically to Mr Foster, and then those relating to Mr Davis.

[18] Mrs Morris worked between June 2001 and July 2004 as town clerk at Brightlingsea. It was a part time job of 3 hours a day, Monday to Friday. She first became aware of Haven Village through her work, and she met Mrs Pollard. In January 2002 she was looking for somewhere to live with her partner, Mr Garry Roberts. They went to see Mrs Pollard. She showed them two lodges, one stucco and one wood. They preferred the wooden one, which was number 52. It had a wide wooden veranda and a good view over the salt marsh. She said that Mrs Pollard told them that during the closed period they could not sleep there at night but could have unrestricted access to the lodge during the day. She needed to be able to work there in the afternoons, and Mr Roberts needed to be able to come home from work, shower and change, with the ability to leave quite late. They also needed to be able to keep their pets there all year round, namely a cat and a rabbit

belonging to her, and Mr Roberts' dog. Mrs Pollard, she said, told her that all this was acceptable. She was told what the quarterly ground rent included and that increases would be modest. They could have a year rent free. She says that they asked how long they could live there and were told that they would eventually be entitled to a 30 year lease for although the existing lease with Brightlingsea was only for another 17 years, it would be renewed. Mrs Morris signed a "caravan order form" for the lodge sited at number 52 on 11 February 2002, agreeing to purchase the lodge from HLL. Her signature acknowledged receipt of the Park Rules, by which she agreed to abide. The price was £47,995. She paid a deposit of £500. She had read the Rules. They made no reference to the closed period. She may have been shown a sales sheet. This confirmed the closed period. It said nothing about day time occupation, and she said that she relied on what Mrs Pollard had told her. On 18 April 2002 Mrs Morris paid to HLL a further £36,495 from the sale of her house. The balance was covered by a hire purchase agreement. Following this, Mrs Morris and Mr Roberts moved into number 52 as their home. Mr Roberts was in the process of divorce and had not then sold his house. The balance was paid off on 22 April 2003 following the sale. During the closed period 2002/3 Mrs Morris and Mr Roberts used their lodge when they wanted to during the day, and Mrs Pollard knew it.

[19] Mrs Morris said that she did not at the purchase stage see a copy of the site licence. In 2003 in her capacity as town clerk she wrote to HLL asking for a copy of it. One was sent to her. She could not now say if she read it. She put it on the file. On 18 November 2003 Tendring wrote to Mrs Pollard asking that a copy of the licence should be displayed outside the park office as well as one being available in it. This was repeated on 16 January 2004 and on 31 August 2007. I find that a copy was put up on the office wall, but was not in a prominent position where it could be read easily.

[20] In the first months of 2003 Mrs Youngs who occupied number 51 at Haven Village was pursuing a number of complaints with BHL and seeking the assistance of the British Holiday and Home Parks Association. She was not concerned with the closed period. She had heard from the Association that a lodge should not be purchased without a signed licence agreement for the occupation of the lodge. Mrs Pollard had told her that this was unnecessary. It appears to have been a consequence of Mrs Youngs' activity that on 23 July 2003 leases signed by BHL were delivered to a number of lodge owners including to Mrs Morris. It was put through her letter box with no explanation. On the same day Mr Hammerton wrote on behalf of HLL saying that the site was not a permanent residential site and in order to comply with site licence conditions owners must have a permanent residential address elsewhere. It asked for the address. This letter went to all owners. Mrs Morris saw that the lease contradicted what she had been told by Mrs Pollard. As a result of further concern a meeting was arranged by Mr and Mrs Youngs with Mr Fox, the Tendring officer who dealt with site licences. It was held on 31 July 2003 and was attended by Councillor Ruffell and about eight residents. Mrs Morris attended. She took a back seat because of her position as both town clerk and a resident. She made some manuscript notes. They include:

> "Lease issued is a) not worth paper written on as not signed by both parties b) is in breach of Head Lease, absolutely barred from issuing leases.
>
> Period of occupancy: tricky one. Head lease says may be used for storage only. Site licence says must not be occupied. Grey area. Cabins *not* sold on condition furniture storage only. Access allowed during day."

[21] On 8 September 2003 Mr Hammerton wrote to Brightlingsea (for the attention of Mrs Morris) saying that the park was not residential and he wished to enforce the rules of occupancy, hence the request for permanent addresses. He also said:

> "it has been our constant endeavour to enforce the winter closure condition. Whilst we have not prevented owners from visiting their units during the period of closure, we have made it clear that occupation is not permitted."

Because of her position Mrs Morris did not reply to the letter herself, but she made a note in answer to it. That included:

> "While tenants know this is not a residential park, some cabins (at least five of which I am aware) were sold to us on the grounds that we could have access during the day, during 'closed' times, as long as we did not sleep there . . . . There is no way I would have bought a cabin on the Park if this had not been the case."

Following this Mr Hammerton instructed Ellisons to prepare a draft licence to be entered into between BHL and lodge owners. This was to be approved by Brightlingsea. On 9 February 2004 Mr Hammerton wrote to Brightlingsea raising the question of an extension to the lease. In June 2004 Brightlingsea decided that a new 30 year lease should be drawn up. It appears that both these matters have been pushed into abeyance by the present dispute.

[22] On 13 December 2004 Mr Hammerton wrote a circular letter stating that no occupation was permitted in the closed period, day or night, that any owner would be reported to Brightlingsea and the services disconnected. This was ignored by most if not all of the owners it affected. On 22 February 2005 he wrote to Mrs Morris threatening to terminate her agreement. In the autumn of 2005 a residents association was formed to protect the interests of its members. A number of the members decided that as BHL was seeking to prevent access during the day in the closed period, they would not only continue to use their lodges during the day but would also sleep there at night. On 14 November Tendring wrote a strong letter to Mr Hammerton about occupation all the year round in breach of the site licence. In December 2005 on Mr Hammerton's instructions, water and electricity were turned off on occasions in order to prevent occupation. On 2 November 2006 and 24 October 2007 Tendring wrote to Mr Hammerton about breaches of planning permission by occupation during the closed period.

[23] Proceedings were issued in three separate actions in the Colchester County Court on 10 April 2006. The actions have not been consolidated, but have been heard together for both directions and trial. The trial has been adjourned on two occasions. On 3 July 2007 and after the trial had been adjourned for the second time the actions were transferred to the High Court in London.

[24] Unlike Mrs Morris and Mr Clark, Mr Foster did not buy his lodge from HLL: he bought it from an existing owner, Mr Davis. There was some conflict between Mr Davis and Mr Foster as to their conversations. I have no doubt that Mr Davis believed what he was telling me, but I have concluded that Mr Foster has the better recollection. Apart from the impression each made, Mr Foster's evidence fits better with the sequence of events as I find them to have been.

[25] Before they moved to Haven Village, Mr Foster and his wife were living on his boat which was moored at a marina in Walton-on-the-Naze. They had sold their flat in Chadwell Heath a year before and were tired of living on the boat. They had friends who had a boat at the same marina and had a lodge at Haven Village. The friends slept on their boat in the closed period. In October 2004 Mr and Mrs Foster went to Haven Village and asked Mr Myson if anything was available. He showed them three lodges which were for sale. He said nothing about the closed period. They saw their friends. They went back to see Mr Myson, and told him they wanted to buy number 50. Mr Foster told Mr Myson that they were living on a boat, and Mr Myson said that they could come back every day in the closed period provided they did not sleep there. This was after the problem of the closed period had arisen between Tendring, BHL and other residents. Nonetheless I am satisfied that Mr Myson said this. Mr Myson said that they would be given a lease for 15 years, and that a new lease was being applied for, which would be added on. He was told that the ground rent was payable quarterly. Nothing was said about increases. Mr Myson gave him single a sheet from the village brochure on which Mr Myson had written the prices of three lodges in manuscript. Mr Foster then telephoned Mr Davis, the owner of number 50, who was in Spain, and offered £73,000 against an asking price of £75,500, which Mr Davis accepted. Mr Foster paid a deposit of £3,000 at the end of September by leaving a cheque made out to Mr Davis with Mr Myson. It was not cashed until 14 October. On a date after 14 October Mr Foster went to see Mr Davis at Haven Village to discuss what Mr Davis was leaving in the lodge. They had some further conversation. Mr Davis referred to the village not being residential, and Mr Foster stated that he had his boat and could stay on that in the closed period. There was no reference to whether the lodge could be

used in the day time during the closed period. Mr Davis had never needed to occupy his lodge in the closed period, either day or night, and I do not think that daytime occupation was an issue which was in his mind. Mr Davis told Mr Foster that he would need to get a lease from Mr Myson. On 3 November Mr Foster again saw Mr Davis at the lodge and paid the balance. It was a very brief meeting. On 4 November Mr Davis wrote to Mr Myson with a cheque for the commission that HLL charged on the transfer of the lodge, namely £2159.06 including vat. It appears that about this time Mr Davis signed a BHL form headed "Transfer of ownership registration", covering the transfer of his lodge to Mr Foster. The date on which he signed is illegible. Mr Foster signed it on 12 November. Mr Foster thereby agreed to accept the Park Rules. The transfer was to take effect on 3 November. It does not appear that there was any further discussion between Mr Myson and Mr Foster as to leases. When asked in cross-examination whether he expected the lease to be transferred or a new one to be issued, Mr Myson answered that that was not his concern, that he just had to get the transfer form (which I have referred to) signed. Mr and Mrs Foster moved into the lodge. Rent was demanded by BHL and was paid. During the closed period 2004/5 they only used the lodge at weekends. Mr Foster was working in London during the day, and he and his wife were using the boat. In October 2005 he received a circular letter from Mr Hammerton saying that no day time visits were permitted in the closed period, and that the rent was increasing from £525 to £595 per quarter - an increase of 13.3%. Following this the Residents Association was formed and he became chairman.

[26] The Third Defendant, Mr Clark, used to live in Nelson Street in Brightlingsea. In March 2002 he went with his wife to Haven Village and was shown round by Mrs Pollard. He told her that he could not buy a lodge until he had sold his house. She told him that they could not sleep at the park for the 42 nights of the closure period. She said a lot of people used bed and breakfast accommodation. According to Mr Clark, and I accept, she said, that people could come back during the day. Mrs Pollard's phrase - "We are like the Windmill, we never close", stuck in his mind. There was no reference by Mrs Pollard to the size of increases in the rent. Mr Clark's lodge was ordered in May 2002. By the order form which he signed he agreed to abide by the Park Rules. He moved in at the end of August.

[27] The closure period was initially less of a problem to Mr and Mrs Clark because at this time they went each year to Malta for January and February. There was however nonetheless the period before Christmas. They stayed with their daughter and went back to the lodge during the day. That position changed when a residence order was made in August 2004 that their grandson, now aged 15, should live with them: they had to give up Malta. They have since then lived in their lodge all the year round.

[28] Mr Clark received a lease from BHL. He did not read it. He got the letter of 13 December 2004. He said that the next day Mr Street knocked on his door and told him to ignore it because it was a mistake. Mr Street was the Park Warden. Because Mr Clark was not present or represented when Mr Street gave evidence he was not asked about this. I think it unlikely that Mr Street said that the letter was a mistake, but he may well have said something to reassure Mr Clark.

[29] In addition to the three Defendants I heard evidence from a number of other occupants of the park. Mrs French sold her flat and moved into the park in early 2000. She was told by Mrs Pollard that so long as she did not sleep overnight she could use her lodge during the closed period. Mrs Dennis came to view the park with her husband on 29 March 2003. They told Mrs Pollard they would be selling their home to move in. Mrs Pollard said that that would be fine, many people had done it, some went away for the closed period, others used bed and breakfast accommodation and came back to their lodges during the day. Mr Graham bought his lodge in August 2000. He used to go abroad in January but in December was working and in the closure period he and his wife stayed in bed and breakfast accommodation. During the day she used the lodge and he would use it in the evening to shower and change and have a meal. Mrs Pollard had told them they could use the lodge during the day provided they left at a reasonable time. Ms Miller moved into her lodge on 13 June 2005, having sold a house to do so. Mr Myson told her that in the closed period she could come back during the day but could not sleep there. She needed to be able to come back. Mr Leatherdale sold his house and on 15 August 2002 purchased a lodge. Mrs Pollard told him and his wife that they could occupy the lodge all the year round during the day but for 42 nights could not sleep there. Ms Cook talked to

Mr Myson in July 2005 and moved into her lodge the following September. Mr Myson had told her that she could have daily access to her lodge provided she did not stay overnight for the 42 nights. She had sold a flat in Colchester to buy the lodge. Mr Cruickshank bought his lodge in August 2002. He and his wife had sold their house. They had been shown round the park by Mrs Pollard, who had said that they could have all the year round access to the lodge during the day but could not sleep there on the 42 nights of the closed period. Mr Cruickshank joked with Mrs Pollard that he would still be able to watch Coronation Street and have his tea before leaving. Mrs England has lived at 6 Haven Village since 1996. Mrs Pollard told her and her husband that during the closed period they should not come back much before 8am and should leave before 8pm. Mr and Mrs Youngs purchased in July 2002. Although they had other difficulties with BHL, the closure period was no problem to them. They had not been told by Mrs Pollard that they could come back during the day. Mrs Youngs apart, all of these witnesses said that they would not have bought their lodges if it had not been for what they were told about coming back during the day in the closed period. I record that I was told that there were further witnesses available to the Defendants but those called were judged to be sufficient. The relevance of the evidence of these witnesses as to what was said to them is that it makes the evidence of the Defendants as to what they were told by Mrs Pollard and Mr Myson the more credible. It gives them powerful support.

[30] The evidence of Mrs Pollard was that she did not tell prospective purchasers that they could occupy their lodges during the day in the closed period but did tell them that they could come back briefly for specific purposes such as feeding an animal or checking the lodge or doing some work to it. Mr Myson's evidence was to the same effect. In the early years the park was slow in filling, and it would have filled much more quickly if there had been no restrictions on occupation. Mrs Pollard was very aware of this. She knew that when people were selling their houses to come to the park there was a problem over the closed period, and I have concluded that she gave such potential customers such assurances as were necessary in the individual circumstances to reassure them. If that meant telling them that they could use their lodges during the day, she would do so. Mr Myson took over from her, and there was a period of three weeks of overlap while he learnt the job. It appears that he continued her approach. Mr Hammerton said that it was his policy to turn a blind eye to occupiers visiting their lodges during the closed period "as necessary for maintenance, taking deliveries and the like". As I have said, no question arises as to the authority of Mrs Pollard and Mr Myson to act on behalf of BHL, and as Mr Hammerton did not deal with the Defendants when they were buying their lodges his position is irrelevant to the questions which arise. However, the probability must be that he was aware that lodges were being used in a way which went at least some distance beyond the limits of his stated policy. This did not matter until problems arose with the local authorities.

[31] I find that Mrs Morris and Mr Clark bought their lodges from HLL on the basis of promises made on behalf of BHL that:

(a) they would become tenants of their lodges under leases;

(b) they would have security of tenure until the termination of the lease held by BHL from Brightlingsea, and any extension of that lease or further lease;

(c) they could occupy their lodges during the day in the closed period but not overnight;

(d) rent was to be paid quarterly; it would not be fixed but might increase each year.

[32] I am not satisfied that anything which Mrs Pollard said is to be taken as a binding promise that the BHL's lease from Brightlingsea would be extended. For, however optimistic she was about it, a moments' reflection would have shown that it was not something that could be guaranteed. I do not consider that what was said by Mrs Pollard to Mrs Morris about rent increases being modest can amount to any form of promise as to the future. It was a statement of general expectation.

[33] I find that promises in the terms of (a) to (d) above were similarly made to Mr Foster, and that on the basis of them he bought Mr Davis's lodge thus earning HLL a commission.

ESTOPPELS AND EQUITIES APART, ON WHAT TERMS DO THE DEFENDANTS OCCUPY THEIR SITES?

[34] It is the case of BHL that the First and Third Defendants hold their sites under quarterly tenancies with BHL. Subject to the effect of any estoppels or equities, this was agreed on behalf of the First Defendant. I should record that BHL stated that nonetheless it would give the Defendants security of tenure to the end of the existing lease provided there was no use made of the lodge during the closed period.

[35] It was asserted on behalf of BHL that the Second Defendant, Mr Foster, has no rights against BHL but only against Mr Davis. The basis is that what was envisaged was a transfer of Mr Davis's lease to Mr Foster, which has not occurred. In my view that is not supported by the evidence. Mr Myson told Mr Foster he would get a lease. Mr Davis told Mr Foster that he should get his lease from BHL. Mr Foster did not think that he was getting a transfer of Mr Davis's lease. BHL has demanded rent from Mr Foster, and Mr Foster has paid rent to BHL. All this points to Mr Foster being in the same position as the other two Defendants, namely that, subject to the effect of any estoppels and equities, he has a quarterly tenancy from BHL. In my judgment that is the position.

[36] It was asserted on behalf of BHL that it was a term of the tenancies that the lodges should not be used during the night in the closed period and should not be used in the day time save for limited purposes in accordance with Mr Hammerton's policy to which I have referred. That was based on what it was submitted that Mrs Pollard and Mr Myson had said as to the terms of occupation. The burden is here on BHL to establish the term. I am satisfied that not only is the term not made out, but the contrary is established as I have stated above.

[37] The position before taking account of any estoppels or equities is that BHL may determine the tenancies by notice in the usual way; the Defendants have no security of tenure; it is a term of the tenancies that the lodge shall not be occupied overnight during the closed period; there is no other term as to occupation.

[38] The position as to the amount of the rent that might be charged was ultimately a matter of agreement. It was accepted that the rent was not fixed but might go up, or down, as was appropriate bearing in mind the matters that were included in it. So when the insurance of the lodges themselves rather than the contents ceased to be included this was to be reflected in a lower rent unless there were other elements in the rent which had increased to neutralise the reduction which would otherwise be appropriate. There was no disagreement as to what the rent covered. It was agreed that increases and decreases in the rent must be reasonable and must reflect the changes in the underlying elements. It was agreed that the Defendants were entitled to an account of the appropriate rents from the start of their respective tenancies. The first step will be for BHL to set out how it justifies the increases that have been charged. It is strongly to be hoped that once that is done each side will be in a position to take a realistic view of the prospects of respectively attacking or defending the figures, and that an agreement can be reached. For the sums at stake are unlikely to merit the costs of pursuing the issues through the court process. If the court process is necessary, the appropriate tribunal is a master of the Queen's Bench Division. He would give directions as to how the matter was to be taken forward.

ESTOPPELS AND EQUITIES.

[39] During the course of submissions made at the trial and subsequently I have been referred to a large number of authorities. Were I to review them all I would find myself engaged in something approaching a

monograph on the law of proprietary estoppel and constructive trusts. I do not think that that is necessary or appropriate. The approach I intend to adopt is to see whether the Defendants' situations appear to fall within the relevant principle and then to consider the various matters raised on behalf of the Claimants as preventing them from doing so.

[40] BHL rely on s 2 of the Law of Property (Miscellaneous Provisions) Act 1989 as a bar to any assertion that the Defendants are contractually entitled to leases. The relevant parts of the section provide:

> "2(1) A contract for the sale or other disposition in land can only be made in writing and only by incorporating all the terms which the parties have expressly agreed in one document or, where contracts are exchanged, in each.
>
> (2), (3), (4) . . .,
>
> (5) . . . and nothing in this section affects the creation or operation of resulting, implied or constructive trusts."

The Defendants submit that they are entitled to rely on the creation and operation of constructive trusts through proprietary estoppel to avoid the effect of s 2(1). The Defendants also submit that, even if they cannot rely on constructive trusts. It is open to them to rely on promissory or proprietary estoppel to avoid the effect of s 2(1).

[41] In *Yeoman's Row Management Ltd v Cobbe* [2008] 1 WLR 1752 Lord Scott stated at para 18:

> "Oliver J (as he then was) stated the requirements of proprietary estoppel in a 'common expectation' class of case in a well-known and often cited passage in *Taylors Fashions Ltd v Liverpool Victoria Trustees Co Ltd* [1982] QB 133 at 144:
>
> 'If A under an expectation created or encouraged by B that A shall have a certain interest in land, thereafter, on the faith of such expectation and with the knowledge of B and without objection by him, acts to his detriment in connection with such land, a Court of Equity will compel B to give effect to such expectation.'
>
> Note the reference to 'a certain interest in land'. *Taylors Fashions* was a case where the 'certain interest' was an option to renew a lease. There was no lack of certainty; the terms of the new lease were spelled out in the option and the lessees' expectation was that on the exercise of the option the new lease would be granted. The problem was that the option had not been registered under the Land Charges Act 1925 and the question was whether the freeholders, successors in title to the original lessor who had granted the option, could be estopped from denying the right of the lessees to exercise the option."

The same citation is made in Snells Equity at the start of the section on proprietary estoppel: 31st edition, paras 10 - 16.

[42] The circumstances here fit within the principle stated in *Taylors Fashions* in the following way. The lodge owners purchased their lodges from HLL in the expectation created and encouraged by BHL, HLL's sister company, that BHL would grant them a lease in the terms which I have held to have been agreed. There is here certainty in all respects. Therefore, submit the Defendants, a constructive trust will be imposed on BHL whereby in each case BHL as long lease holder is made a trustee of a beneficial interest in relation to the Defendant's plot and in favour of the Defendant for a period of years in the terms I have set out.

[43] In para 19 of his written closing submissions Mr Tanney accepted that, if I found the facts as I have, "an equity by estoppel would arise to that effect". It is well first to consider what is meant in these circumstances by "an equity". It is, I think, no more than the recognition of a situation in which the court can consider granting equitable relief because it would be equitable to do so. He went on to submit that such an equity could not be satisfied by the grant of an interest until 2019, because in the absence of a constructive

trust s 2(1) would take effect. He submitted that there could be no constructive trusts here. Mr Tanney cited three authorities.

[44] The first was *Yaxley v Gotts* [2000] Ch 162, [2000] 1 All ER 711, [1999] 3 WLR 1217. This case was also relied on by Mr Cottle and Mr Schmitz. There the Second Defendant agreed orally to give the Claimant, a builder, the ground floor of a house which he was proposing to purchase if the Claimant converted the house into flats. The house was purchased by the Second Defendant's son, the First Defendant, and he adopted the agreement. The Claimant performed his part of the bargain but the First Defendant refused to grant the Claimant any interest in the property. It was held that the agreement was enforceable by a constructive trust whereby the Claimant had an interest in the property. The Court of Appeal upheld the judge's order that a lease should be granted in favour of the Claimant. In the course of his judgment Robert Walker LJ stated at pp 174 to 177:

> "I have no hesitation in agreeing with what I take to be the views of Peter Gibson, Neill, and Morritt LJJ, that the doctrine of estoppel may operate to modify (and sometimes perhaps even counteract) the effect of section 2 of the Act of 1989. The circumstances in which section 2 has to be complied with are so various, and the scope of the doctrine of estoppel is so flexible, that any general assertion of section 2 as a 'no-go area' for estoppel would be unsustainable. Nevertheless the impact of the public policy principle to which Sir John Balcombe drew attention in *Godden v Merthyr Tydfil Housing Association* does call for serious consideration. It is not concerned with illegality (some confusion may have arisen from the inadequate report or note shown to this court in *Bankers Trust Co v Namdar*) but with what Viscount Radcliffe in *Kok Hoong v Leong Cheong Kwent Miknes Ltd* [1964] AC 993, 1016, called a principle of general social policy:
>
> 'to ask whether the law that confronts the estoppel can be seen to represent a social policy to which the court must give effect in the interests of the public generally or some section of the public, despite any rules of evidence as between themselves that the parties may have created by their conduct or otherwise.'
>
> In this case that principle must of course be applied consistently with the terms in which s 2 of the 1989 Act has been enacted, including the saving at the end of s 2(5).
>
> Parliament's requirement that any contract for the disposition of an interest in land must be made in a particular documentary form, and will otherwise be void, does not have such an obviously social aim as statutory provisions relating to contracts by or with moneylenders, infants, or protected tenants. Nevertheless it can be seen as embodying Parliament's conclusion in the general public interest, that the need for certainty as to the formation of contracts of this type must in general outweigh the disappointment of those who make informal bargains in ignorance of the statutory requirement. If an estoppel would have the effect of enforcing a void contract and subverting Parliament's purpose it may have to yield to the statutory law which confronts it, except so far as the statute's saving for a constructive trust provides a means of reconciliation of the apparent conflict.
>
> *Goff & Jones, The Law of Restitution,* 5th ed (1998), p 580, a textbook of high authority, reaches the tentative conclusion that:
>
> 'even if the purchaser can demonstrate that the vendor's conduct was so unconscionable that it would be inequitable for him to rely on the absence of writing, to order the conveyance of, or to declare him trustee of, the property is an inappropriate remedy in that it frustrates the policy underlying section 2(1) of the Act of 1989,'
>
> In inquiring whether the parliamentary purpose is frustrated it is necessary to note that wide range of relief which may be granted where a claim to proprietary estoppel is established. Just how wide that range is, appears for instance, from *Snell's Equity,* 29th ed (1990) p 577. The general aim is to 'look at the circumstances in each case to decide in what way the equity can be satisfied' (*per* Sir Arthur Hobhouse in *Plimmer v Mayor of Wellington* (1884) 9 App Cas 699, 714) and to achieve 'the minimum equity to do justice to the Plaintiff' (*per* Scarman LJ in *Crabb v Arun District Council* [1976] Ch 179, 198). Sometimes the equity is given effect to simply by dismissing an adverse claim. But in other cases more positive action is needed, extending (as *Snell* notes at p 578, with numerous examples) both to giving the Claimant an equitable lien on the disputed property for his expenditure, and to the positive conferment of title on the Claimant. That is the sort of relief referred to in the Law Commission's report (Law Com No 164, pp 18 - 20 para 5.5) as going to the extent of an order for land to be transferred.
>
> . . .

Proprietary estoppel and constructive trusts

At a high level of generality, there is much common ground between the doctrines of proprietary estoppel and part performance. All are concerned with equity's intervention to provide relief against unconscionable conduct, whether as between neighbouring landowners, or vendor and purchaser, or relatives who make informal arrangements for sharing a home, or a fiduciary and the beneficiary or client to whom he owes a fiduciary obligation . . . .

The overlap between estoppel and the constructive trust was less fully covered in counsel's submissions but seems to me to be of central importance to the determination of this appeal. Plainly there are large areas where the two concepts do not overlap: when a landowner stands by while his neighbour mistakenly builds on the former's land the situation is far removed (except for the element of unconscionable conduct) from that of a fiduciary who derives an improper advantage from his client. But in the area of a joint enterprise for the acquisition of land (which may be, but is not necessarily, the matrimonial home) the two concepts coincide. Lord Diplock's very well known statement in *Gissing v Gissing* [1971] AC 886, 905 brings this out:

'A resulting, implied or constructive trust - and it is unnecessary for present purposes to distinguish between these three classes of trust - is created by a transaction between the trustee and the cestui que trust in connection with the acquisition by the trustee of a legal estate in land, whenever the trustee has so conducted himself that it would be inequitable to allow him to deny to the cestui que trust a beneficial interest in the land acquired. And he will be held so to have conducted himself if by his words or conduct he has induced the cestui que trust to act to his own detriment in the reasonable belief that by so acting he was acquiring a beneficial interest in the land.'

Similarly Lord Bridge of Harwich said in *Lloyds Bank plc v Rosset* [1991] 1 AC 107, 132:

'The first and fundamental question which must always be resolved is whether, independently of any inference to be drawn from the conduct of the parties in the course of sharing the house as their home and managing their joint affairs, there has at any time prior to acquisition, or exceptionally at some later date, been any agreement, or arrangement to share in this sense can only, I think be based on evidence of express discussions between the partners, however imperfectly remembered and however imprecise their terms may have been. Once a finding to this effect is made it will only be necessary for the partner asserting the claim to a beneficial interest against the partner entitled to the legal estate to show that he or she has acted to his or her detriment or significantly altered his or her position in reliance on the agreement in order to give rise to a constructive trust or a proprietary estoppel.'

It is unnecessary to trace the vicissitudes in the development of the constructive trust between these two landmark authorities, except to note the important observations made by Sir Nicolas Browne-Wilkinson V-C in *Grant v Edwards* [1986] Ch 638, 656, where he said:

'I suggest that in other cases of this kind, useful guidance may in the future be obtained from the principles underlying the law of proprietary estoppel which in my judgment are closely akin to those laid down in *Gissing v Gissing* [1971] AC 886. In both, the Claimant must to the knowledge of the legal owner have acted in the belief that the Claimant has or will obtain an interest in the property. In both, the Claimant must have acted to his or her detriment in reliance on such belief. In both, equity acts on the conscience of the legal owner to prevent him from acting in an unconscionable manner by defeating the common intention. The two principles have been developed separately without cross-fertilisation between them: but they rest on the same foundation and have on all other matters reached the same conclusions.'

In this case the judge did not make any finding as to the existence of a constructive trust. He was not asked to do so, because it was not then seen as an issue in the case. But on the findings of fact which the judge did make it was not disputed that a proprietary estoppel arose, and that the appropriate remedy was the grant to Mr Yaxley, in satisfaction of his equitable entitlement, of a long leasehold interest, rent free, of the ground floor of the property. Those findings do in my judgment equally provide the basis for the conclusion that Mr Yaxley was entitled to such an interest under a constructive trust. The oral bargain which the judge found to have been made between Mr Yaxley and Mr Brownie Gotts, and to have been adopted by Mr Alan Gotts, was definite enough to meet the test stated by Lord Bridge in *Lloyds Bank plc v Rosset* [1991] 1 AC 107, 132."

The conclusion was that the legal interest in the house was subject to a constructive trust under which the beneficial interest was a term interest, rent free, in the ground floor. That was to be given effect to by ordering the grant of an appropriate lease. The parallel with the present case is sufficiently plain, and the Defendants can rely on it.

[45] *Kinane v Mackie-Conteh* [2005] EWCA Civ 45, [2005] 2 P & CR D9, [2005] 06 EG 140 (CS) was concerned with an agreement to give a charge over a property to support a loan made in connection with a commercial obligation related to a letter of credit. The property had been acquired previously by the Defendant and there was no connection between its acquisition, the loan and the charge. It was accepted that the agreement for the charge did not comply with s 2 of the 1989 Act, but a constructive trust was relied upon. In the course of delivering the leading judgment in the Court of Appeal Arden LJ reviewed *Yaxley v Gotts*. She later stated in paras 32 and 33 of her judgment:

> "32 As I see it, the policy of section 2(1) of the 1989 Act is to protect the public by preventing parties from being bound by a contract for the disposition of an interest in land unless it has been fully documented in writing. However, in section 2(5) Parliament has acknowledged that under section 2(1) there is a risk that one party will seek to take advantage of the sanction provided by that subsection when it is unconscionable for him so to do. To that extent, section 2(5) plays a role similar to that of part performance, although it operates more flexibly than that doctrine. Unconscionability on the part of the party seeking to rely on subsection (1) is the touchstone giving rise to a constructive trust. It will arise where a party led another party to believe that he would obtain an interest in property to another and then stands by while that other party acts to his detriment in reliance on that promise. The knowledge of the disadvantaged party is of less significance. Here Mr Mackie-Conteh induced Mr Kinane to make the loan before the formal documentation was executed. Even though the venture was abortive, Mr Mackie-Conteh benefited therefrom to the extent that he did not have to find another lender to get to the stage where FMBC could produce a letter of credit. The risk of the letter of credit at that stage not meeting the seller's requirements was one which, under the parties' agreement, Mr Mackie-Conteh and not Mr Kinane, had implicitly agreed to bear.
>
> 33 In proprietary estoppel, the court awards a remedy appropriate to satisfy the expectations that the Defendant has indeed. This need not be an interest in land. However, in my judgment, that is the appropriate remedy in this case and neither counsel has suggested otherwise."

Neuberger LJ stated:

> "39 In these circumstances, it appears to me that the only real question in the present case is whether, in the light of the facts found by the judge, it can be said that a 'constructive trust', within the meaning of section 2(5) of the 1989 Act, was created.
>
> 40 When considering that question, one must, I think, avoid regarding the subsection as an automatically available statutory escape route from the rigours of section 2(1) of the 1989 Act, simply because fairness appears to demand it. A provision such as section 2 of the 1989 Act was enacted for policy reasons which, no doubt, appeared sensible to the legislature. Accordingly, just as with section 4 of the 1677 Act, the court should not allow its desire to avoid what might appear a rather harsh result in a particular case to undermine the statutory policy.
>
> 41 Accordingly, when considering whether section 2(5) is engaged, the court should consider whether, on the particular facts, it can fairly be said that a resulting, implied or constructive trust has been created. It would be contrary to legal principle, and inconsistent with the statutory purpose, if the court were to hold that a particular set of facts fell within section 2(5) if, as a matter of extra-statutory law, the facts could not properly be said to give rise to 'the creation or operation of [a] resulting implied or constructive trust'. In other words, in my view, it would be wrong to give an artificially wide (or indeed an artificially narrow) meaning to the words of section 2(5) of the 1989 Act.
>
> 46 . . . For the purposes of this appeal, I am content to assume, in favour of Mr Mackie-Conteh, that it would not be open to Mr Kinane to avoid the consequences of Section 2(1) of the 1989 Act if he could only establish a proprietary estoppel, and not a trust.
>
> 49 However, I am persuaded that the reasoning, and the authorities cited, in *Yaxley* do lead to the conclusion that a constructive trust was created in the present case.
>
> 51 As I see it, at least for present purposes, the essential difference between a proprietary estoppel which does not also give rise to a constructive trust, and one that does, is the element of agreement, or at least expression of common understanding, exchanged between the parties, as to the existence, or intended existence, of a proprietary interest, in the latter type of case. That requirement is plainly satisfied in the present instance, and accordingly it seems to me that Section 2(5) can properly be invoked by Mr Kinane."

[46] The third case which Mr Tanney cited was *Yeoman's Row*. The decision of the Court of Appeal had not then been overturned by the House of Lords. In *Yeoman's Row* the parties had reached a broad but incomplete agreement (not complying in any event with s 2) that if Mr Cobbe obtained planning permission for the redevelopment of Yeoman's Row's land, Yeoman's Row would sell the land to Mr Cobbe at a price, he would carry out the redevelopment and there would be a division of the ultimate proceeds. Mr Cobbe obtained planning permission but Yeoman's Row were prepared only to proceed on terms which were substantially less advantageous to Mr Cobbe than had been agreed. Lord Scott gave the leading judgment with which all save Lord Walker agreed. Lord Scott divided his judgment into three sections: proprietary estoppel; constructive trust and non-proprietary remedies. The separation of the first two subjects is in contrast with the many authorities where there has been held to be areas of overlap between the two. Thus it is stated in Gray and Gray's Elements of Land Law, 4th edition para 10.177:

> "An extremely close relationship exists between proprietary estoppel and the constructive trust and the convergence of the concept is today so marked that the doctrines are, in many respects, indistinguishable. The component elements of proprietary estoppel are overwhelmingly similar to those of constructive trust."

Lord Scott held that there would be no proprietary estoppel because Yeoman's Row could not be banned from asserting that an agreement which was incomplete was not binding: Mr Cobbe always knew that Yeoman's Row was not bound. That is a considerable simplification of a substantial part of his opinion, but in my view that is what it comes to.

[47] At the end of this section Lord Scott stated:

> "29 There is one further point regarding proprietary estoppel to which I should refer. Section 2 of the 1989 Act declares to be void any agreement for the acquisition of an interest in land that does not comply with requisite formalities prescribed by the section. Subsection (5) expressly makes an exception for resulting, implied or constructive trusts. These may validly come into existence without compliance with the prescribed formalities. Proprietary estoppel does not have the benefit of this exception. The question arises, therefore, whether a complete agreement for the acquisition of an interest in land that does not comply with the section 2 prescribed formalities, but would be specifically enforceable if it did, can become enforceable via the route of proprietary estoppel. It is not necessary in the present case to answer this question, for the second agreement was not a complete agreement and, for that reason, would not have been specifically enforceable so long as it remained incomplete. My present view, however, is that proprietary estoppel cannot be prayed in aid in order to render enforceable an agreement that statute has declared to be void. The proposition that an owner of land can be estopped from asserting that an agreement is void for want of compliance with requirements of section 2 is, in my opinion, unacceptable. The assertion is no more than the statute provides. Equity can surely not contradict the statute. As I have said, however, statute provides an express exception for constructive trusts. So to Mr Cobbe's constructive trust claim I must now turn."

The paragraph does not sit easily with those cases where it has been held that a proprietary estoppel may be given effect to by a constructive trust.

[48] Under the heading of constructive trust Lord Scott considered first the creation of constructive trusts arising from joint ventures relating to property, typically land, as exemplified in *Pallant v Morgan* [1953] Ch 43, [1952] 2 All ER 951, [1952] 2 TLR 813. There two men agreed that, if one did not bid for a property at auction and the other proceeded, they would divide it between them. It was held that the one held the property for himself and the other jointly. Lord Scott made plain in para 31 that he did not regard these cases as having anything to do with proprietary estoppel: they were recognitions of constructive trusts arising from failed joint ventures. He then considered a number of cases supporting the proposition that a constructive trust will not come into being in a joint venture case where the property was already held by the owner when the venture came into being. In para 37 he concluded that the unconscionable behaviour of Yeoman's Row was not enough to justify Mr Cobbe's claim to be awarded a beneficial interest. His reasons were that Yeoman's Row had already owned the property; that the agreement was known by both parties to be unenforceable; that an unenforceable promise to perform an unenforceable agreement could give no greater advantage than an unenforceable agreement; that Mr Cobbe's expectation of an enforceable contract was

dependent on Yeoman's Row's decisions as to the incomplete agreement; and that Mr Cobbe never expected to acquire an interest save under an enforceable agreement.

[49] Lord Walker gave the only other substantive opinion in *Yeoman's Row*. Lord Brown agreed with it and also with that of Lord Scott. Lord Walker began by stating that while equitable estoppel (the term he used) was a flexible doctrine it must be applied in accordance with principle rather that in the exercise of a judicial discretion guided by who appeared to have right on his side in the particular situation. Lord Scott had also made this point. Lord Walker then cited para 10.189 of Gray which postulates three categories of circumstance in which proprietary estoppels may arise: (1) imperfect gifts, (2) cases of "common expectation, and (3) cases of unilateral mistake". The present case falls, if it falls anywhere, within the second category. Lord Walker examined the "great case" of *Ramsden v Dyson* (1866) LR 1 HL 129, 12 Jur NS 506, 14 WR 926. He said that passages in the case were too well known to need repetition. Gray and Gray state in para 10.195:

> "10.195 The classic exposition of the 'common expectation basis of proprietary estoppel occurs in the dissenting speech of Lord Kingsdown in *Ramsden v Dyson.* Here Lord Kingsdown stated that:
>
> 'If a man, under a verbal agreement with a landlord for a certain interest in land, or, what amounts to be same thing, under an expectation, created or encouraged by the landlord, that he shall have a certain interest, takes possession of such land, with the consent of the landlord, and upon the faith of such promise or expectation, with the knowledge of the landlord, and without objection by him, lays out money upon the land, a Court of Equity will compel the landlord to give effect to such promise or expectation.'"

I refer to para 41 above, where a very similar formulation is cited.

[50] Having reviewed the authorities Lord Walker concluded in para 63 that the critical issue was whether "there was, on the judge's findings, a common expectation of the type capable of raising an equitable estoppel". In para 68 he contrasted cases in the domestic and commercial contexts saying that in a commercial context the Claimant is typically a business person with access to legal advice who expects to get a *contract*. In the present case the situation is closer to the domestic.

[51] In para 81 Lord Walker held that conscious reliance on honour alone - which was Mr Cobbe's position - could not give rise to an estoppel. In para 93 he stated that Mr Cobbe could not "obtain any further assistance from the doctrine of the constructive trust". He did not think that it was necessary or appropriate to consider the issue as to s 2 of the 1989 Act. Lord Walker did not refer to the line of cases considered by Lord Scott relating to joint venture cases and property acquired before the venture came into being.

[52] That Lord Walker made only a brief reference to the doctrine of constructive trusts seems to me explicable in this way. If Mr Cobbe could not make out the basis for an equitable or proprietary estoppel, neither could there be any foundation for treating Yeoman's Row as a constructive trustee.

[53] In addition to Yeoman's Row and the cases there cited Mr Tanney relied on the judgement of Millett LJ in *Paragon Finance plc v Thakerar* [1999] 1 All ER 400 at 408a to 409g to support his contention that there could be no constructive trust here because BHL were already leaseholders before any agreements were reached with the Defendants. The case was brought by mortgage lenders against solicitors who had acted both for them and the borrowers. The solicitors had failed to inform the lenders that the borrowers were sub-buyers at inflated prices. The lenders commenced proceedings alleging breach of contract, negligence and breach of fiduciary duty. More than six years after the last transaction they sought to amend their claim to allege, inter alia, fraudulent breach of trust and intentional breach of fiduciary duty. It was held that claims based on allegations of fraud and dishonesty did not involve substantially the same facts as a claim based on allegations of negligence, and so leave to amend was refused. The lenders' case was that the mortgage monies had been obtained by the solicitors dishonestly and so they held the money subject to a constructive

trust to return it immediately. In the course of his leading judgment in the Court of Appeal Millet LJ stated at pp 408 and 409:

> "Regrettably, however, the expressions 'constructive trust' and 'constructive trustee' have been used by equity lawyers to describe two entirely different situations. The first covers those cases already mentioned, where the Defendant, though not expressly appointed as trustee, has assumed the duties of a trustee by a lawful transaction which was independent of and preceded the breach of trust and is not impeached by the Plaintiff. The second covers those cases where the trust obligation arises as a direct consequence of the unlawful transaction which is impeached by the Plaintiff.
>
> A constructive trust arises by operation of law whenever the circumstances are such that it would be unconscionable for the owner of property (usually but not necessarily the legal estate) to assert his own beneficial interest in the property and deny the beneficial interest of another. In the first class of case, however, the constructive trustee really is a trustee. He does not receive the trust property in his own right but by a transaction by which both parties intend to create a trust from the outset and which is not impugned by the Plaintiff. His possession of the property is coloured from the first by the trust and confidence by means of which he obtained it, and his subsequent appropriation of the property to his own use is a breach of that trust. Well-known examples of such a constructive trust are *McCormick v Grogan* (1869) LR 4 HL 82 (a case of secret trust) and *Rochefoucald v Boustead* [1897] 1 Ch 196 (where the Defendant agreed to buy property for the Plaintiff but the trust was imperfectly recorded). *Pallant v Morgan* [1952] 2 All ER 951, [1953] Ch 43 (where the Defendant sought to keep for himself property which the Plaintiff trusted him to buy for both parties) is another. In these cases the Plaintiff does not impugn the transaction by which the Defendant obtained control of a property. He alleges that the circumstances in which the Defendant obtained control make it unconscionable for him thereafter to assert a beneficial interest in the property.
>
> The second class of case is different. It arises when the Defendant is implicated in a fraud. Equity has always given relief against fraud by making any person sufficiently implicated in the fraud accountable in equity. In such a case he is traditionally though I think unfortunately described as a constructive trustee and said to be 'liable to account as constructive trustee'. Such a person is not in fact a trustee at all, even though he may be liable to account as if he were. He never assumes the position of a trustee, and if he receives the trust property at all it is adversely to the Plaintiff by an unlawful transaction which is impugned by the Plaintiff. In such a case the expressions 'constructive trust' and 'constructive trustee' are misleading, for there is no trust and usually no possibility of a proprietary remedy; they are 'nothing more that a formula for equitable relief': *Selangor United Rubber Estates Ltd v Cradock (No 3)* [1968] 2 All ER 1073 at 1097, [1968] 1 WLR 1555 at 1582 per Ungoed-Thomas J."

[54] Lord Walker's analysis of equitable estoppel contained no reference to constructive trusts. Nor for instance is there any such reference in the speech of Lord Kingsdown in *Ramsden v Dyson*. The development of the modern doctrine is stated by Gray and Gray in para 10.215 as follows:

> "10.215 This trend towards proprietary recognition was heavily reinforced by the view that, in most cases, the inchoate equity of estoppel already contains, in embryonic form the proprietary interest later awarded by the court in perfection of the equity. English courts developed the theory that the estoppel Claimant's interest in property 'predates any order of the court.' The court order merely operates, by virtue of some doctrine of relation back (or even on the footing that 'equity looks on as done that which ought to be done') to vindicate some earlier, anticipatory prototype of the entitlement now ordered in favour of the Claimant. It thus became steadily more apparent that proprietary estoppel generates anticipatory beneficial rights behind a trust, constructed by the court which then provides the basis for the court's subsequent order of either specific performance or compensatory damages for breach. All of which returns the argument full circle to the point that proprietary estoppel and constructive trust are intricately inter-related doctrines."

[55] In my judgment the present case falls squarely within the principle stated by Lord Kingsdown in *Ramsden v Dyson* and Oliver J in *Taylors Fashions*. I consider that it is open to the court to hold that BHL is a constructive trustee in the manner I have stated. I do not consider that the fact that BHL already owned its leasehold is a bar to that. This is not a joint venture case which is what Lord Scott was considering. Nor, in my view, is Mr Tanney's reliance on the passage cited from *Paragon Finance* appropriate. Millett LJ was there considering a wholly different situation to the present. In these circumstances s 2(1) of the 1989 Act is no bar to the Defendants' claims.

REMEDY: DISCRETION, ILLEGALITY AND CLEAN HANDS

[56] There is no difficulty in giving the Defendants the security of tenure which they require. For, if it is a real difficulty, the covenant in the lease with Brightlingsea not to underlet can be avoided by an appropriately drafted licence or other agreement falling short of a lease. The problem is daytime occupation in the closed period.

[57] I was not addressed in any detail as to the form of relief which might be granted to the Defendants to satisfy the rights which I have found they have. It was suggested by Mr Cottle that all that was required at this point were declarations. But declarations that the Defendants were entitled to a lease or licence on the terms they seek would pre-judge issue of how the court's discretion should be exercised in the circumstances. The Defendants' rights could be protected in two ways. One way would be to make a mandatory order for the grant of leases or licences. The other would be by way of injunction preventing BHL from terminating the Defendants' rights to occupy their sites either (1) simply by notice during the period of BHL's existing lease with Brightlingsea as extended or renewed, or (2) on the ground of daytime occupation during the closed period. If it is inappropriate in the circumstances to exercise the court's discretion in either way, it might be open to the Defendants to claim damages in lieu of those orders. I refer to *Jaggard v Sawyer* [1995] 2 All ER 189, [1995] 1 WLR 269, [1995] 1 EGLR 146. I was not addressed directly as to that. Mr Tanney suggested in closing that the Defendants might either be given the opportunity to require BHL to buy their lodges at the prevailing rate and to pay their removal costs; alternatively that they should be awarded damages on the basis of the differences in the values of their lodge with daytime occupation in the closed period and without. Mr Cottle made no submissions in response to that.

[58] Mr Tanney submitted that it would be wrong to satisfy the Defendants' equities by ordering the grant of leases in the terms claimed by them because in particular it would put BHL in breach of the site licence and the criminal law. Section 9(1) of the 1960 makes it an offence punishable by a fine for the occupier of a site, here BHL, to fail to comply with a condition attached to the site licence. If the occupier is convicted of so failing on two or more previous occasions, the licence may be revoked. Mr Tanney submitted that the grant of leases permitting daytime occupation in the closed period would put BHL in breach of the section. It was submitted by Mr Schmitz for the Third Defendant, his submission being adopted by Mr Cottle, that any offence or offences contrary to s 9 were committed when the Defendants were permitted to take possession of their sites without it being made a term of their occupation that the closed period was excluded. By s 127 of the Magistrates Courts Act 1980 there is a bar on magistrates dealing with an offence unless the information was laid "within six months from the time when the offence was committed, or the matter of complaint arose". (It was suggested by Lord Upjohn in *Mixnam's Properties Ltd v Chertsey Urban District Council* [1965] AC 735 at 764, [1964] 2 All ER 627, 62 LGR 528 that the occupier of a caravan site had a remedy under s 12 of the 1960 Act against a licensee/tenant of a pitch where a breach of site condition occurred. However s 12 applies only to situations where there has been an offence contrary to s 1 - use of land as a caravan site without a site licence.)

[59] In my view the application of s 9 of the 1960 Act to the present circumstances is a matter of difficulty. I was informed that Tendring are holding over consideration of prosecution until the outcome of these proceedings. I was not referred to any authority, and really heard no contrary argument from Mr Tanney, save that he submitted his clients were at risk. I do not think that I should attempt to predict the outcome of a prosecution in these circumstances.

[60] I was referred to two authorities which I should mention on this part of the case. The first was *Chalmers v Pardoe* [1963] 3 All ER 552, [1963] 1 WLR 677, a decision of the Privy Council on appeal from Fiji. It was a provision of the Native Land Trust Ordinance that a lessee under the Ordinance should not deal with the land without consent, and any dealing without consent should be null and void. The Appellant built himself a house on land held by his friend, the Respondent, as assignee of a lease from the Native Land Trust Board. The two fell out. The Appellant claimed an equitable charge or lien on the land for the sum he had expended. It was held that "unless there is some special circumstance which precludes it, equity would intervene to prevent Pardoe from going back on his word and taking the buildings for nothing". It was further held, however, that there had been a "dealing" in the land between the two men, and there having been no

consent, the dealing was unlawful and equity could not aid the Appellant, Chalmers. This was a case where the two parties involved themselves in a dealing in land which they knew, or could be taken to have known, was unlawful, because no consent had been obtained. That is not the present case.

[61] *Tinsley v Milligan* [1994] 1 AC 340, [1993] 3 All ER 65, [1994] 2 FCR 65 was cited by Mr Cottle. There two women formed a joint business venture in lodging houses. Using funds from the business they purchased a house in the name of the Claimant but on the basis they were joint beneficial owners. The purpose of that arrangement was to enable a benefit fraud. Later they fell out, the fraud was disclosed and the Plaintiff brought proceedings to get possession of the house. It was held by a majority of three to two in the House of Lords that the illegality was no bar to the Defendant's claim to an interest in the house because she did not need to set the illegal purpose to establish her claim. The analogy which Mr Cottle drew on behalf of the Defendants was that the problems which face BHL as regards site licence, planning permission and lease, are no part of the Defendants' claims.

[62] I accept that there is no illegality in the present case which stands as an absolute bar to the Defendants' claims to relief in equity. But I also accept that the problems to which I have referred are relevant to how the court's discretion in giving relief should be exercised.

[63] Mr Tanney submitted that the Defendants were not entitled to relief because they did not come to the court "with clean hands". That was because they have deliberately used their lodges overnight in the closed period since the dispute arose in October 2005. This was the decision of a number of residents made on the basis that if BHL was going to try and stop them using their lodges in the daytime, as they thought illegitimately, they would not abide by the rule as to not staying overnight. The First and Second Defendants offered an undertaking to the court that they would not occupy their lodges overnight in the closed period, subject to liberty to apply under s 2(2) of the Mobile Homes Act 1983. The Third Defendant, Mr Clark, did not offer an undertaking. I did not raise the matter with him. His lodge is his only home, and the severity of his illness prevented him considering alternative accommodation in the closed period. In these circumstances I do not consider that the Defendants' past conduct should stand as a bar to relief.

[64] I have concluded it is not appropriate at this point in time to determine what relief the Defendants should obtain. That is because a solution to the problems posed in particular by the site licence may come about through the decisions of Tendring, and, to a lesser extent Brightlingsea. There is the recent application for a variation of the planning permission. If that succeeds, it is possible that this will lead to the problems disappearing. Let me make it wholly plain that I am not expressing any view whether it should succeed or not: that is not my function and I am in no position to form any view of the planning issues which arise. What I am saying is that I should not decide how my discretion to give the Defendants' relief should be exercised until the outcome of that application is known, and perhaps also until the further attitude of the local authorities is known. I will then hear full submissions on this part of the case, which have not so far been made.

-MISREPRESENTATION

[65] As an alternative to their primary claims the Defendants claim damages for misrepresentation. The alleged misrepresentations which are relied on are the statements of Mrs Pollard and Mr Myson as to the leases the Defendants would receive. These were promises as to the future. They are not representations of fact which can give rise to a claim for damages under s 2 of the Misrepresentation Act 1967. It is not alleged that Mrs Pollard and Mr Myson did not give honest and accurate statements of what their intentions were at the time.

HARASSMENT

[66] The harassment of the Defendants is alleged to have consisted essentially of two types of conduct: first, the writing of letters to the Defendants by Mr Hammerton from December 2004 which were described as of a threatening nature; second, the acts of turning off water and electricity and the provision of bollards to prevent vehicular access, all during the closed period.

[67] Section 2 of the Harassment Act 1997 gives a civil remedy for the breach of s 1(1) of the Act, which may include damages for anxiety. By s 1:

> "(1) A person must not pursue a course of conduct -
>
> (a) which amounts to harassment of another, and
>
> (b) which he knows or ought to know amounts to harassment of the other.
>
> (1A) A person must not pursue a course of conduct -
>
> (a) which involves harassment of two or more persons, and
>
> (b) which he knows or ought to know involves harassment of those persons, and
>
> (c) by which he intends to persuade any person (whether or not one of those mentioned above) -
>
> (i) not to do something that he is entitled or required to do, or
>
> (ii) to do something that he is not under any obligation to do.
>
> (2) For the purposes of this section, the person whose course of conduct is in question ought to know that it amounts to or involves harassment of another if a reasonable person in possession of the same information would think the course of conduct amounted to or involved harassment of the other.
>
> (3) Subsection (1) or (1A) does not apply to a course of conduct if the person who pursued it shows -
>
> a. that it was pursued for the purpose of preventing or detecting crime,
>
> b. that it was pursued under any enactment or rule of law or to comply with any condition or requirement imposed by any person under any enactment, or
>
> c. that in the particular circumstances the pursuit of the course of conduct was reasonable."

By s 7(2) references to harassing "include alarming the person or causing the person distress". Section 7(3) provides that "a 'course of conduct' in relation to a single person (see s 1(1)), conduct on at least two occasions in relation to that person, . . .". There is no further definition of harassment provided by the Act.

[68] I am satisfied that the acts in question were all instigated by Mr Hammerton because he considered that the Defendants were acting in breach of their agreements not only by occupying their lodges during the day during the closed period but also during the night. That was in breach of the site licence. He was under pressure from Tendring to secure compliance, and he was acting as he did in order to secure compliance with the conditions of the site licence. That falls within s 1(3)b. There is no requirement in s 1(3)b that the conduct need be reasonable. I make that observation, but I do not mean to suggest that Mr Hammerton's conduct was unreasonable. This finding obviates the need to make further assessment of Mr Hammerton's

conduct in the context of the Act. I should have been in some difficulty in doing that first because the claim was presented on the basis that the facts were essentially agreed, and Mr Hammerton was cross-examined but briefly on this topic. I do not complain about that: it was important to keep a check on the costs of the action. Secondly, the application of the Act's provisions to circumstances such as the present is far from straight-forward. The claims for damages for harassment fail.

ARE THE LODGES "CARAVANS" AS DEFINED BY LAW?

[69] "Caravan" is defined by s 29(1) of the 1960 Act as meaning:

> "Any structure designed or adapted for human habitation which is capable of being moved from one place to another (whether by being towed, or by being transported on a motor vehicle or trailer) and any motor vehicle so designed or adapted, but does not include -
>
> (a) any rolling stock which is for the time being on rails forming part of a railway system, or
>
> (b) any tent."

[70] Section 13 of the 1968 Act adds to the definition in the following way:

> "13 Twin-unit caravans
>
> (1) A structure designed or adapted for human habitation which -
>
> (a) is composed of not more than two sections separately constructed and designed to be assembled on a site by means of bolts, clamps or other devices; and
>
> (b) is, when assembled, physically capable of being moved by road from one place to another (whether by being towed, or by being transported on a motor vehicle or trailer).
>
> shall not be treated as not being (or as not having been) a caravan within the meaning of Part 1 of the Caravan Sites and Control of Development Act 1960 by reason only that it cannot lawfully be so moved on a highway when assembled.
>
> (2) For the purposes of Part I of the Caravan sites and Control of Development Act 1960, the expression 'caravan' shall not include a structure designed or adapted for human habitation which falls within paragraphs (a) and (b) of the forgoing subsection if its dimensions when assembled exceed any of the following limits, namely -
>
> (a) length (exclusive of any drawbar): 65.1516 feet (20 metres);
>
> (b) width: 22.309 feet (16.8 metres);
>
> (c) overall height of living accommodation (measured internally from the floor at the lowest level to the ceiling at the highest level): 10.006 feet (3.05 metres).
>
> (3) . . .
>
> (4) . . ."

The question is whether the lodges fall within this definition. The figures in square brackets were substituted by order in 2006: SI 2006/2374, art 2(a).

[71] It is necessary to give some further description of the lodges. They are brought to site in two sections. Each section has three walls and an open side which will be at the centre line of the assembled lodge. Each section sits on a metal chassis with wheels under its centre and a towing jig and wheel at the front. The jig and front wheel are designed to be detached and stored under the assembled lodge. The main wheels remain in place but off the ground. Timber frame box floor sections are bolted to the chassis. Each section is winched onto a transporter and delivered to site. On site the sections are manoeuvred on their wheels using skids - boards or sheeting - under the wheels as necessary. When they are placed side by side the two sections form the lodge, their slopping roofs peaking at the join. The two chasses are bolted together along their length. The outer sides of the chasses are then raised on tripods until the two roof ridges meet at the top. It is primarily this inward pressure which keeps the two sections or halves together above the level of the chasses. Timber or concrete blocks are positioned beneath the chasses for additional support and to assist with levelling. Externally a ridge piece is fitted to cover the join of the two roofs, and the gable ends are sealed. Guttering and down pipes and also flue pipes - chimney pipes, are fitted. Internally the line between the two adjacent beams which run along the line of the ridge - one in each section, is covered by a board. Floor coverings which were fitted in the factory and removed for transport are replaced. Services are connected. Each of the Defendants' lodges has a veranda or decking running around it on the same level as the lodge floor. These verandas could be free-standing but are in each case fixed with nails or screws, in one case utilising joist hangers. I saw these fixings. There are steps which give access.

[72] The Claimants assert that the lodges are caravans within the expanded definition in s 13. They say that the lodges are made in not more than two sections, that they are when assembled physically capable of being moved by road from one place to another, even if not lawfully, and are within the dimension limits set out in s 13(2). The Defendants' case is that the lodges are made of more than two sections because, for example, the ridge pieces and the floor coverings are separate sections. It was submitted that the verandas were part of the lodges. It was submitted that the lodges are not physically capable of being moved as required by the section. It is the Defendants' case that they are outside the dimensions permitted by the section because the eaves should be included.

[73] I should record that there is nothing unusual about the Defendants' lodges. They are standard products made by a well-known manufacturer and are believed by "the trade" to come within the definition. It may well be that there will be consternation within the trade and on caravan sites if they are not caravans within the Act. But that is irrelevant to my decision.

[74] I was referred to the following authorities on this part of the case. In *Carter v Secretary of State* [1994] 2 EGLR 194, [1994] 29 EG 124, [1994] 1 WLR 1212 the decision was that a "Park Home" which consisted of four prefabricated sections and could only be moved after being dismantled was not a caravan.

[75] *Byrne v Secretary of State* (1997) 74 P & CR 420 concerned a log cabin which was the subject of an enforcement notice. The issue arose whether the cabin was a caravan in law. It was held by HHJ Rich QC sitting as a High Court judge that it was not because it was not assembled on site out of two separately constructed sections. That was sufficient to determine the case. Judge Rich went on to consider whether the cabin could meet the requirement of mobility. He stated at p 425:

> "The consideration of the mobility test in paragraph 11 [of the Inspector's decision] clearly has regard to the movability of the structure from the particular site upon which it had been erected. This, Mr Boyle urges upon me, is an error of law, because, he says, what is to be considered is the nature of the structure rather than the circumstances of the structure in regard to the particular place where is has been erected.
>
> I am uncertain what is the true construction of section 13(1)(b) in this respect. It appeared to me, when I read the paragraph at first, that the phrase 'when assembled' is a clear indication that its mobility is to be tested by reference to the circumstances where and how it had in fact been assembled.

> Mr Boyle submits and submits persuasively, that there is an alternative meaning of 'when assembled', namely in its assembled state. He submits further, that since what is to be considered is whether it is capable of being moved by road from one place to another, it is not to be construed as meaning from the particular place where it has in fact been erected. That I find a highly persuasive argument and one which I would readily accept if I did not immediately recognise the source of the expression 'one place to another' which is merely a repetition of the phrase which had been found already in the definition of section 29(1) of the 1960 Act.
>
> I remain, therefore, inclined to the view that the proper construction of the paragraph is that which I first gave it, namely that when assembled means when and as assembled in the state where the question of whether or not it is to be deemed to be a caravan falls to be determined. I readily acknowledge that I may be wrong as to that construction of the paragraph, and it is therefore convenient that I should go on to consider, on the assumption that what is to be considered is the structure independent of its position, whether there would be reason to interfere with the Inspector's decisions."

[76] It was also held by the Lands Tribunal in *Atkinson v Foster* [1996] RA 246 that in considering mobility it was necessary to consider the actual position where the structure was, including access, trees etc.

[77] In *Howard v Charlton* [2002] EWCA Civ 1086, [2003] 1 P & CR 343, [2002] 3 EGLR 65 it had been held in the Canterbury County Court that an extension of 3.7 metres by 1.88 metres described as a porch and attached to the side of the home had not changed the characterisation of the home as a mobile home (or caravan). It was bolted on and could be unbolted. The Court of Appeal held that the owner of the park was not entitled to recover possession of the site regardless of the correctness of that finding, and so did not need to consider it. In the course of giving the leading judgment Carnwath LJ stated after referring to s 29 of the 1960 Act:

> "It is immediately apparent that something may be a 'caravan' for these purposes, even though it bears no relation to what might be regarded as a caravan in ordinary language. In particular it does not need to have wheels; it is enough that it can be transported in a trailer. The definition was further expanded by the Caravan Sites Act 1968. This, it seems, was intended to remove doubts about the application of the definition of the larger types of caravan, usually referred to as 'twin unit caravans', which became popular in the 1960's."

[78] It was suggested by Mr Cottle that I should tend to construe the Act to find that the lodges in question here were not caravans because they are the Defendants' homes and as such were entitled to protection under art 8 of the European Convention for the Protection of Human Rights. I do not think that such an approach would be appropriate. Even if my decision affected only these Defendants, I would have considerable doubt whether I should in the circumstances here look with any more favour on one side of the argument than another. But the position is that the decision will affect many others, who may well be better placed if their lodges are caravans as they believe them to be. Article 8 should play no part in my decision.

[79] It was submitted on behalf of the Defendants that the lodges were not structures composed of not more than two sections by reason of the roof ridges, the floors and the verandas. The expression "roof ridge" is used to refer to the v-shaped piece that is fitted over the join at the ridge formed by the connection of the two roofs when the lodges were assembled on site. I am satisfied that this is not to be treated as a separate section. It is but common sense that there will be small pieces that are required to be added to the assembled sections to complete the structure as a home. They are not "sections" and do not prevent the structure falling within the definition given by s 13.1. I consider that this covers items such as the roof ridges, guttering, flues and also the floors. By floors I do not refer to the underlying floor structure which is constructed in the factory which sits on the chassis. I refer to the floor which is designed to lie on top of that and to bridge the join between the two halves, which is fitted in the factory, removed and refitted on site. It is made of thin laminate or equivalent, and can readily be removed again. The verandas and any other "add-ons" are of a different nature. The question here is whether they are to be treated as part of the structure to which the section refers. I am satisfied that they are not. They can easily be removed without doing any real damage to the lodge itself. Plainly a free-standing veranda would not fall to be treated as part of the

structure. I do not think that a veranda which uses the lodge for support but can easily be detached from it should be treated differently. On the other hand, if what was effectively a separate room was added by being built on to the structure, whether called a porch, a sun lounge, a conservatory or something else, this might well become part of the structure and be a section in itself.

[80] The next issue is that of the dimensions. If the eaves are included, the lodges exceed the dimensions stated in s 13(2). In my view, if one is measuring the width of a structure such as the lodges, it is normal to take the wall measurements and to exclude the roof measurements. Secondly it seems to me to be more likely that Parliament would seek to control the wall measurements for width and length rather than the roof measurements.

[81] Section 5(6) of the 1960 Act empowers the specification by the minister of "model standards with respect to the layout of, and the provision of facilities, services and equipment for, caravan sites or particular types of caravan site . . .". I was provided with "Model Standards 1989: Holiday Caravan Sites". Paragraph 2 is supportive of the last two paragraphs in general terms. As Mr Cottle said, it represents no more that the views of the two departments involved, the Department of the Environment and the Welsh Office, and they are not an aid to the construction of the Act.

[82] The measurement of the lodges by Mr Michael Snow, a surveyor instructed as a joint expert showed that they met the s 13(2) measurements unless the eaves overhang was to be included, in which case there was an excess of 10cms in each case. In my judgment they comply with s 13(2).

[83] Section 13 of the 1968 Act requires that the structure "is, when assembled, physically capable of being moved by road from one place to another (whether by being towed, or by being transported on a motor vehicle or trailer)": but it need not be capable of being lawfully so moved. The last provision appears to be because of width problems: I refer to *Howard v Charlton*, para 6. The phrase "from one place to another" also occurs in s 29(1) of the 1960 Act, but s 29(1) does not refer to "by road". Section 13 provides alternatives, movement by towing, and movement by loading onto a carrier. The two opposing constructions are these: whether the structure must be capable of being moved by road from one place to another, with no specific places or roads in mind, or whether the structure must be capable of being moved from where it is and moved by road to another place.

[84] I have concluded that the first construction is the correct one. My main reason is that it is consistent with the purpose of the Act that, if a structure is once a caravan, it should remain a caravan if it is itself unaltered, regardless of where it is. If a lodge meeting the requirements of the section and so a caravan is assembled on a site, it should not cease to be a caravan if it becomes boxed in by other lodges and cannot be got out because lifting apparatus cannot sufficiently approach. Likewise with the growth of trees. Likewise with the change of season making ground alternatively passable or impassable to equipment or the lodge. It is also very possible that the kind of caravan that is towed behind a car might be placed in a position from which for one reason or another it could not be moved, either temporarily, or permanently. It is surely unthinkable that it would then cease to be a caravan as defined in s 29 because "it was not capable of being moved from one place to another". I therefore decline to follow the view tentatively express by HHJ Rich in the *Byrne* case. In my judgment the test which the structure has to pass is as follows. It must either be physically capable of being towed on a road, or of being carried on a road, not momentarily but enough to say that it is taken from one place to another. It is irrelevant to the test where the structure actually is, and whether it may have difficulty in reaching a road.

[85] I do not have to consider whether a lodge which becomes frail through age and immovable for that reason may cease to be a "caravan" because of it. Common sense suggests not. The answer may well be in the phrase in s 13(1) "when assembled". If it can be moved when assembled, when first assembled, that is sufficient. If that is right, this is a further reason for construing the section as I have. For subsequent events are not relevant.

[86] There was evidence as to the mobility of the lodges as follows. Mr Nigel Leek is the sales manager of Cosalt Holiday Homes Ltd, the manufacturer of the Defendants' lodges. He gave evidence to this effect. The intention of the company is to design units which meet the statutory definition. Cosalt has been a member of the National Caravan Council and the British Holiday Home Parks Association for many years. The National Caravan Council checks products to see that they comply with the Act. Mrs Morris's lodge is a standard Lautrec model manufactured by Cosalt. Mr Foster's is a standard Cezanne, and Mr Clark's is a standard Matisse. Mr Mark Lally is director general of the National Caravan Council. He stated that the Department of Environment had confirmed in correspondence that it was correct to exclude eaves from size measurements. Mr Martyn Hadfield is production manager of Cosalt. He described in some detail how the chassis under each of the two units was constructed and how the units were assembled. He showed a video recording of an assembled Lautrec model being towed by a tractor in a factory yard in March 2006. This was not done for this case but to demonstrate for general purposes the capability of being towed. The unit was moved quite slowly, was turned and was backed. There were no problems. I accept that a similar exercise could have been carried out with Picasso and Matisse models. Mr Christopher Sawyer is a consultant engineer, who was instructed as a joint expert. He was not required to give evidence, but his report and answers to questions were relied on. It was his opinion that neither the size nor weight of the lodges prevented transportation by road. He understood that the two chasses or under structures were not joined to each other. That is wrong: they are bolted together, and this is an essential part of the assembly of units on site. He considered that the two units would need to be joined by an additional steel structure before a lodge could be put on a trailer. He considered the problems of lifting the lodge from where they are onto a transporter. He considered that Mrs Morris's lodge and Mr Foster's lodges could be lifted with difficulty and at risk of ground damage and certain disturbance of neighbouring occupants. He considered that it would not be possible to lift Mr Clark's lodge by crane because of its distance from the nearest road. He considered whether the lodges could be towed off site if boards were used. He concluded that it would be difficult and some damage to the site might be caused, but it was possible. The verandas and other "add-ons" would need to be removed. He stated that the lodges could not be towed without damage to them, because of the two separate under-structures. This arose from his failure to appreciate that the two chasses were bolted together. It is shown to be wrong in practice by the video of an assembled unit under tow. For the same reason he considered that a beam structure would have to be placed under the lodges before they could be lifted by a crane. Despite the bolting of the two chasses that may be right: but the support need not be as substantial or elaborate as Mr Sawyer anticipated. Mr Sawyer advised as to the work that would have to be done to prepare the lodges for being moved, in particular the items which he considered should be removed. I do not think that this gives rise to any difficulty either as a matter of law or of practicality. He considered the lodges could not be towed on a road on their own wheels at in excess of six miles per hour.

[87] Mr Tanney did not assert that the video of the assembled lodge being towed was a complete answer to the need to establish appropriate mobility. However, on my view as to the correct construction of s 13 it is. It shows that these lodges are physically capable of being moved, albeit slowly, by road from one place to another. Further, Mr Sawyer's evidence taken with the fact that the chasses are bolted together shows that the lodges could be towed from their present sites, and then towed along the road. It shows that the lodges of Mrs Morris and Mr Foster could be lifted out, and then moved on their own wheels or on a transporter. It shows that Mr Clark's could not be lifted out. In my judgment it is enough that the lodges are capable of being towed on a road from one place to another. They can also be carried on a transporter. Either is enough. These lodges are caravans within the Acts.

Judgment accordingly.

APPENDIX C

The Planning Inspectorate

Appeal Decisions

Hearing Held on 12 June 2019
Site visit made on 12 June 2019

by Simon Hand MA

an Inspector appointed by the Secretary of State for Communities and LocalGovernment

Decision date: 26 June 2019

Appeal A: APP/U1240/C/18/3204771
Trotters Plot, track from Uddens Drive to Clayford Farm, Clayford, Wimborne, Dorset, BH21 7BJ

- The appeal is made under section 174 of the Town and Country Planning Act 1990 as amended by the Planning and Compensation Act 1991.
- The appeal is made by Mr Lee against an enforcement notice issued by East Dorset District Council.
- The enforcement notice, numbered ENF/16/0335, was issued on 10 May 2018.
- The breach of planning control as alleged in the notice is in the approximate position marked with a black cross, unauthorised construction of a timber constructed building used for residential purposes.
- The requirements of the notice are a) cease the use of the building hatched green for habitable accommodation as a dwelling-house; b) demolish the building hatched green on the attached plan; c) remove all the resulting materials from the land affected following compliance with b) above.
- The period for compliance with the requirements is 6 months.
- The appeal is proceeding on the grounds set out in section 174(2) (b), (c), (f) and (g) of the Town and Country Planning Act 1990 as amended. Since the prescribed fees have not been paid within the specified period, the appeal on ground (a) and the application for planning permission deemed to have been made under section 177(5) of the Act as amended have lapsed.

Appeal B: APP/U1240/C/18/3207038
Trotters Plot, track from Uddens Drive to Clayford Farm, Clayford, Wimborne, Dorset, BH21 7BJ

- The appeal is made under section 174 of the Town and Country Planning Act 1990 as amended by the Planning and Compensation Act 1991.
- The appeal is made by Mrs Lee against an enforcement notice issued by East Dorset District Council.
- The enforcement notice, numbered ENF/16/0335, was issued on 10 May 2018.
- The breach of planning control as alleged in the notice is in the approximate position marked with a black cross, unauthorised construction of a timber constructed building used for residential purposes.
- The requirements of the notice are a) cease the use of the building hatched green for habitable accommodation as a dwelling-house; b) demolish the building hatched green on the attached plan; c) remove all the resulting materials from the land affected following compliance with b) above.
- The period for compliance with the requirements is 6 months.
- The appeal is proceeding on the grounds set out in section 174(2) (a), (b), (c), (f) and (g) of the Town and Country Planning Act 1990 as amended.

Appeal C: APP/U1240/W/18/3219361
Trotters Plot, track from Uddens Drive to Clayford Farm, Clayford, Wimborne, Dorset, BH21 7BJ

- The appeal is made under section 78 of the Town and Country Planning Act 1990 against a refusal to grant planning permission.
- The appeal is made by Mrs Jenna Lee against the decision of East Dorset District Council.
- The application Ref 3/17/1982/FUL, dated 14 July 2017, was refused by notice dated 28 June 2018.
- The development proposed is change of use of equestrian land to residential, replacement septic tank, extension of existing shed for use as store and associated parking area. Demolition of barn, retrospective.

Decisions

Appeals A and B 3204771 & 3207038

1. The appeals are allowed and the enforcement notice is quashed.

Appeal C 3219361

2. The appeal is allowed and planning permission is granted for change of use of equestrian land to residential, replacement septic tank, extension of existing shed for use as store and associated parking area. Demolition of barn, retrospective at Trotters Plot, track from Uddens Drive to Clayford Farm, Clayford, Wimborne, Dorset, BH21 7BJ in accordance with the terms of the application, Reference:3/17/1982/FUL, dated 14 July 2017, subject to the following condition:

    1) The development hereby permitted shall be carried out in accordance with the approved plan: Trotters Plot amended block plan, 1:500@A4, submitted with appeal on 23/12/2018. The change of use hereby granted permission shall be restricted only to the area outlined in red on that plan. The parking and turning area shall be used only for the parking and turning of vehicles and for no other purposes.

Costs Application

3. An application for costs relating to Appeals A and B was made by the appellants and is the subject of a separate decision letter.

Background to the Appeals

4. The site lies in the green belt in an area of woodland and pasture somewhat remote from any roads but in an isolated cluster of dwellings and farm buildings. Set to the south of the access track is a paddock which contains the appeal structure, with a modest garden area, parking and turning for several vehicles, a storage shed, a stables with a concrete apron outside and a half built concrete block barn-like building which apparently has planning permission.

5. The appeal structure stands on the site of a former barn, which has been removed and which once contained a caravan. A lawful development certificate exists for the stationing of a caravan for residential purposes on the site of the former barn. The red line drawn around the area which lawfully can be used for that purpose is effectively the footprint of the now demolished barn, which

is also the same size as the appeal structure. In essence, having achieved a lawful use for residential purposes the appellant has tried to take advantage of the current limitations on the size and design for a caravan, in order to maximise their living space.

6. Appeals A and B turn on whether they have overstepped the mark in doing so, in which case they will have inadvertently created a permanent dwelling and the ground (a) is to grant planning permission for that dwelling. However, the appellants made it clear they are not seeking planning permission for a permanent dwelling, except as a last resort, and if the appeal succeeds on ground (b) they withdraw the ground (a) appeal. Appeal C is to provide the new appeal structure with an access, parking and some garden area as the lawful use of all the land outside the new structure is agricultural.

The Appeal on Ground (b)

7. The definition of a caravan is contained within the Caravans Sites Act 1968 to include twin unit caravans provided that they meet the requirements of section 13(1). *"A structure designed or adapted for human habitation which — (a) is composed of not more than two sections separately constructed and designed to be assembled on a site by means of bolts, clamps or other devices; and (b) is, when assembled, physically capable of being moved by road from one place to another (whether by being towed, or by being transported on a motor vehicle or trailer)"*. The Act also includes maximum dimensions and the maximum width is 6.8m. The Council argue that the appeal structure is not a caravan as a matter of fact as it is too wide, is composed of at least three sections which were not constructed separately and then designed to be fastened together and it cannot be moved on the road. The parties therefore agreed the issue turns on the construction test, the mobility test and the dimension test.

The construction test

8. This test falls into two parts, firstly, are there more than 2 sections, and if not, are the sections "*separately constructed and designed to be assembled on a site by means of bolts, clamps or other devices*". There is no dispute that the living accommodation of the unit consists of two sections. These were manufactured in Romania and delivered to the site broken down into kit form. The final act of construction, once it had been assembled into two halves was to join the them together with bolts etc. The issue between the parties is that the Council allege the two separate halves were actually constructed as one unit on the site, albeit one that was separable into two. It was then moved apart and re-joined in a cynical attempt to pass the construction test.

9. Various court cases and an appeal decision were referenced. In Byrne[1], the court held that "*if the process of construction was not by the creation of two separately constructed sections then joined together...*" it was not a caravan. It is thus clear that the two sections have to be constructed separately before being joined together. In Brightlingsea[2] a lodge that comprised of two parts brought to the site and then joined together was a caravan. Each half sat on a metal chassis with wheels and a towing device. But that is not the case here and there is no suggestion that a caravan is defined as having a chassis or

[1] Byrne v SSE & Arun DC (1997) 74 P&CR 420
[2] Brightlingsea Haven Ltd and others v Morris and others [2008] EWHC 1928

wheels. Finally an appeal decision in Borrowash[3] accepted that construction of the two halves did not have to take place off site. In the current appeal the kit was assembled on site, and it is agreed this does not prevent it from being a caravan. None of these authorities greatly help in the issues in this appeal, which have to turn on their own facts.

10. I agree that if the Council's analysis of the construction method was the case then the two sections would not have been '*separately constructed'*, the apparent 'separate' construction would just have been a smokescreen and the structure would not be a caravan within the terms of the Act. However, I do not think this is a fair description of events. I was shown photographs of the whole unit under construction, apparently as one unit, and also as two. It is also clear there was a final act of joining together. It was explained that as the two halves are built up from the various elements of the kit, they are placed side by side in order to ensure they various components would eventually fit together. The two halves were moved apart and back together as required during construction. This seemed to me be a reasonable explanation of the construction process.

11. A neighbour provided photographs of the end gable at a late stage in construction. This gable contained the longitudinal split of the two halves. It appeared from the photographs that the cladding on the side was fastened in long strips across the two halves, and then, presumably later cut through with a circular saw to re-create the two separate halves again. This too could be fatal to the requirement that the two halves were separately constructed. However, on closer examination it seems the scaffolding pole in the foreground of the picture sat exactly over the actual gap between the two halves and so hid it from view. The cut ends of the cladding could just be seen at one point, suggesting the gap was there, but hidden from view by the scaffold pole. Given the whole structure was delivered in a kit form, and each separate part was made to fit together to form two halves, it seems unlikely the rather crude method of cutting the wood with a circular saw after being fixed would be used to finish the cladding. Consequently I do not consider these photographs show the construction of one unit rather than two. Other photographs showed the roof felting covering the gap between the two halves, but inevitably the roof would have to be waterproofed in this way, this does not mean the construction test is failed.

12. The whole process is somewhat artificial as no doubt it would be easier to design and construct a building of the same dimensions as a single unit, but the two units are required by the Act and by the planning system. In this case it seems to me the design and construction of the two halves was indeed within the wording of s13(a).

13. A subsidiary issue is that the structure consists of more than 2 sections. The two halves are supported on wooden beams which are regularly spaced running from front to back and the beams in turn are lifted off the ground by adjustable metal feet which sit on a base of crushed stone. The metal feet are bolted to the beams, but the accommodation sits on the beams without any direct fastening. The manufacturer of the structure recommends using low walls made of concrete blocks but the appellants chose here the beam and feet option.

[3] APP/N1025/C/01/1074589 (19 April 2002).

14. The Council argue that when the two halves are winched off and onto a lorry, the beams and feet will be left behind. They thus form a third section taking the whole structure beyond the limitation of s13. In my view, to form a 'section' of the structure the elements in consideration should form an integral part of that structure. All caravans, mobile homes and park homes (all of which are designed to fall within the definition of a caravan) have to sit on the ground in some way. If they sit flat on the ground there are issue with damp and with future mobility, so they usually are raised off the ground, which also allows pipes for services to be easily run to them and disconnected if they are moved. A touring caravan sits on its chassis and wheels. A much larger mobile home will usually have a metal chassis and wheels, but the wheels will not support the mobile home which will have metal legs that are lowered down to level the unit on the ground. Park homes can have a similar arrangement, but I was informed they can also sit on props of all kinds. I have seen numerous mobile homes that sit at least partly on concrete walls where they are on sloping sites.

15. I was informed the appeal structure is internally structurally sound and the floor is braced so that the beams are not an integral part of its stability. The beams could be removed and each metal leg have a shorter piece of wood (or similar material) to spread the load where it supported the unit above. I agree that this is just a method for supporting the structure above the ground, it is not a separate section, such that the structure could be said to be composed of more than two sections. In my view therefore the construction test is passed.

The mobility test

16. This test is rather more easily dealt with. The Council did not, in the end, dispute the evidence provided that the two halves of the structure could be winched up by a large crane and then put on the back of a trailer to be taken to another site. Their contention was that the third section (the beams and feet) would be left behind. As I have concluded the beams and feet do not form a third section, whether they are left behind or not does not affect the mobility of the two halves that do form the unit, so the mobility test is passed.

The dimension test

17. There is no dispute the wall to wall width of the structure is 6.29m, which is 51cm within the allowance. However, the Council point out that the roof timbers overhang the walls by 40cm on each side to create eaves. To these are attached fascia boards and guttering, adding an extra 12cm to each side, giving a total width of 7.33m or 53cm too much. I agree with the Council that a structure either fits within the measurements or it does not, there is no room for a de minimis excess other than that of a few millimetres which could be explained as measurement error.

18. The appellants position is essentially that it is obvious the measurement is meant to be wall to wall and excludes projecting eaves or rainwater goods etc. This is how the industry as a whole understands it and to find otherwise would be to take away the definition of caravan from numerous mobile and park homes at a stroke. I was shown two plans of mobile homes currently on the market, which were 6.79m wide, plus overhanging eaves and gutters. I was also referred to the case of Brightlingsea (referred to above) where this issue was fully aired and incidentally where the court held that whether

consternation would be caused to manufacturers of mobile homes was irrelevant to the outcome of the case.

19. In Brightlingsea the court had to determine whether a lodge was a caravan for the purposes of the 1968 Act. In that case, as in this appeal, the wall to wall measurements were within the 6.8 limits but not if the eaves were included. The court held in paragraph 80 of the judgement "*if one is measuring the width of a structure such as the lodges, it is normal to take the wall measurements and to exclude the roof measurements. Secondly it seems to me to be more likely that Parliament would seek to control the wall measurements for width and length rather than the roof measurements*".

20. There was considerable discussion at the Hearing about the model conditions for a caravan site, and the Government's response to the consultation on extending the measurements to 6.8m. it is clear from these that the 6.8m is intended to be wall to wall, and the diagram in the consultation response, which is repeated in the model conditions shows exactly that. I accept that these are merely the view of the Government department, not a definitive guide to the Act, and the model conditions are primarily concerned with caravan spacing, rather than actual sizes, nevertheless it is instructive that the advice is consistent in measuring wall to wall. However, the courts view in Brightlingsea seems to me to be decisive and also to agree with the Government's own view. I have been given no reasons to consider this appeal should be treated as different from these authorities and so I consider the dimension test is met.

Conclusion

21. Taking this all together I consider the structure enforced against is a caravan within the meaning of the 1968 Act. The matters alleged have not occurred and so the appeal succeeds on ground (b). I shall allow the appeal and quash the notice.

Appeal C – Creation of a Curtilage

22. The s78 appeal is for a material change of use of a defined area of land around the caravan from agricultural to residential. A plan has been supplied which shows the extent of the land affected. This includes an access from the track, a turning area, a small strip of land to the south of the park home and an area around a shed next to the park home.

23. The Council accept that whether the residential structure is a caravan or a permanent dwelling it is reasonable for it to have some form of garden area, an access and some parking. When the original LDC was granted, the red line was drawn tightly around the footprint of the old tin barn which contained the caravan. This, the Council argue, gave the then much smaller caravan an area of land for residential use. The appellant has now filled this land up with the new larger park home, but as I have found it to be lawful, it follows this too should be allowed an area of land around it for residential use. Had I allowed the appeal on ground (a), the Council suggested a strip of land 7m wide to the south and east of the park home would be acceptable. This would take up most, but not all of the proposed access drive and about half the parking and turning area but would be slightly more generous than the proposed garden strip to the south of the park home. What it would exclude is the shed.

24. In my view the turning area is obviously necessary for convenience and safety, and that proposed is more or less the minimum required. The strip of garden to the south is not controversial, and again is the only outdoor garden space available (the land to the north between the park home and the track contains the stable). The shed has been in existence for some years, and that is not in dispute. However, it has been enlarged by the appellants, adding 2m onto the end, turning it from a 4x3m to a 4x5m shed.

25. The site lies in the green belt where inappropriate development is harmful. The NPPF at paragraph 146 notes that certain forms of development, including a material change of use of land, are not inappropriate providing they preserve openness and do not conflict with the purposes of including land in the green belt in first place. The purposes of including land in the green belt are explained in paragraph 134 and these are high level purposes that are not infringed by this minor encroachment. Although a material change of use should preserve openness, this is not a blanket ban on any structures at all but should be seen in the context of what the material change of use is. In this case it is for residential purposes and includes a modest shed which are required for a use that has already been fund to be lawful. The small extension of the shed does not in this context harm openness and neither would the parking of cars associated with, what is in this context, a modest bungalow with a small area for parking and turning. Vehicles would have to be parked somewhere and there would potentially be more impact if there was not an identified area to do so. Any further extension of the area into the countryside would require planning permission and could well have an effect on the green belt, but as it is drawn, it seems to me to be entirely reasonable.

26. Consequently, I do not find the proposed material change of use to be inappropriate development. The residential land acquires no permitted development rights, so there should be no further development on the site. It therefore also accord with policy HE3 of the Christchurch and East Dorset Core Strategy which seeks to protect landscape character. The septic tank and demolition of the barn are not opposed by the Council.

27. I shall allow the appeal and grant planning permission for the material change of use, subject to the condition that the uses are limited to the area shown on the plan provided as part of the appeal.

Simon Hand

Inspector

APPEARANCES

FOR THE APPELLANT:

Amy Cater	Solicitor
David Vestey	Surveyor
Clive Miller	Agent for Enforcement appeals
Vik Cooper	Timber Spec
Ian Lassiter	Agent for s78 appeal
Janet Lee	Appellant

FOR THE LOCAL PLANNING AUTHORITY:

Ms Poonam Pattni	Of counsel
Pip Williams	Enforcement
Elizabeth Adams	Planning
Anthony Delk	Surveyor

INTERESTED PERSONS:

Tim Harris	Neighbour

DOCUMENTS

1 Written submissions on behalf of the Council
2 Statement of common ground – enforcement
3 Statement of common ground – s78
4 Amending the definition of a caravan - ODPM consultation paper and response.
5 Floor plans and measurements of typical park homes
6 Photographs from Mr Harris
7 Transcript of Lloyd v SSCLG & Dacorum BC [2014] EWCA Civ 839
8 Costs application