ABBOTS ARBORICULTURAL ADVICE

Bedmond Yard, Bedmond Road, Abbots Langley, Hertfordshire, WD5 0RP
t: 01923 606551 e: shane.lanigan@abbotsarboriculturaladvice.com
w: www.abbotsarboriculturaladvice.com

Arboricultural Method Statement with Tree Protection Plan



Brooklands, Causeway Road, Broughton, Huntingdon PE28 3AS

CLIENT:	[redacted]
CLIENT REF:	**MM/BCRBH**
AAAL REF:	**SAL/KMA/12248a – REVISION 1**
AAAL CONSULTANT	[redacted]
REPORT DATE:	**18th December 2024**

© Abbots Arboricultural Advice Limited. All rights reserved. No part of this publication may be reproduced, stored in a retrieval system, or transmitted in any form or by any means (electronic, mechanical, photography, recording, or otherwise) without written permission from Abbots Arboricultural Advice Limited

TABLE OF CONTENTS	PAGE NO.

VALIDATION STATEMENT 4

SUMMARY 5

1. INTRODUCTION 6
2. INSTRUCTION 7-9
3. ARBORICULTURAL METHOD STATEMENT 10-14
4. KEY TO TREE SURVEY DATA 15-17
5. ASSUMPTIONS AND LIMITING CONDITIONS..... 18
6. CERTIFICATION OF PERFORMANCE 19

APPENDIX 1 - TREE SURVEY SCHEDULE 20-21

APPENDIX 2 - SUMMARY OF QUALIFICATIONS AND EXPERIENCE OF S.A. LANIGAN 22

APPENDIX 3 - PHOTOGRAPHS 23-29

APPENDIX 4 - REFERENCES 30

APPENDIX 5 -PROGRAMME OF ARBORICULTURAL INPUT 31-32

APPENDIX 6 - A BRIEF EXPLANATION OF TREE PRESERVATION ORDERS/ CONSERVATION AREAS 33

APPENDIX 7 - TREE PROTECTION PLAN

APPENDIX 8 - PROTECTIVE BARRIERS

Validation Statement for Local Planning Authority (LPA) registration of this report

This report fulfils the recommended national list criteria for tree survey/arboricultural information. More specifically, it contains the following.

- A full tree survey compliant to the requirements of BS 5837:2012 Trees in relation to design, demolition and construction – Recommendations, undertaken by a qualified arboriculturist.

- A plan to a suitable scale with a north point and showing tree survey information, retention categorisation and root protection areas.

- An arboricultural method statement detailing the means of tree protection, implementation and phasing of works.

SUMMARY

This development proposal essentially involves works to renovate and remodel the existing house and the side barn annexe at the western end of the dwelling house and demolish and rebuild the extension that is joined to the eastern end close to the boundary with Brooklands Cottage. The buildings will not be extended beyond their current footprint. However, in order to complete the renovations, demolition, and replacement building operations – although only those in connection with the left-side barn annex will inevitably take place within the calculated Root Protection Area (RPA) of one retained tree (T3 – walnut), some tree protection measures will be needed to guard against mechanical impacts and concomitant damage. This is because site personnel will need to pass through and work within the RPA when working at this end of the site.

Arisings from the works (at the eastern building end) will need to be taken out across the existing grassed area and then via the existing hard-surfaced driveway. Materials needed for the building operations will be brought in using the same route. This will entail haulage vehicles and small plant crossing over parts of the calculated RPAs of T2 (crab apple) and T3 (walnut). Ground protection mats shall be placed along the delineated route to the building eastern end to guard against ground compaction; this should ensure that repeated passes of personnel and small plant will be kept outside the calculated RPA of T1 (Lawson cypress). Due to the existing hard surfacing ground compaction will not be an issue around either T2 or T3, but there is potential for mechanical damage to be caused to the three trees' (T1, T2 & T3) trunks by vehicles and plant. Tree protection barriers will be installed before the works begin and maintained throughout the entire building operation to prevent this.

Providing the specifications within this method statement are followed the works can be undertaken without harm to the retained trees.

[redacted] **– Chartered Arboriculturist**
MICFor, Dip.Arb. (RFS), M.Arbor A, RCArborA – ISA, BCMA, CUEW,
ASCA Registered Consulting Arborist #588

Reference publications are listed at the back of this report (Appendix 4)

1. Introduction

1.1 **Instruction**: I am instructed by [redacted] of Raydan Watkins Architects – acting in capacity of agent to the property and project owner [redacted] - to prepare an Arboricultural Method Statement for this site. It will be driven by a full tree survey of the trees that might be affected by the works. Data collected during the tree survey will lead to the creation of an Arboricultural Method Statement which will include specifications for on-site tree protection and a Tree Protection Plan to graphically show the proposed protection measures. The report takes account of the design plans provided and is intended to be suitable for inclusion with the planning application. I will provide the following information and associated data within my report which will accompany the planning application.

- A schedule of trees to include basic data as required by BS 5837: (2012) complete with a condition assessment.

- An arboricultural method statement pertaining to working methods and the protection and management of retained trees.

2. Instruction

2.1 I began my inspection at 9.07 am on Saturday 7th December 2024 concluding at 10.12 am. Weather conditions during my time on site were cool with light rain. Visibility remained adequate for my purposes.

2.2 **Background Information**: 'Brooklands' is an aged cottage-style building (see photograph 7, Appendix 3). It is located at the northwestern site end close to the rear boundary. It has seemingly been extended to the western end to add a garage and additional living space (see photographs 4, 5 & 6, Appendix 3), a small extension has been built on to the eastern end (see photograph 7, Appendix 3). The property owners now plan to improve the building by internally renovating the existing dwelling-house and the associated barn annexe: they will also demolish the eastern end extension and replace it with a new building of superior design. The replacement structure will better complement the setting which is within a Designated Conservation Area.

2.2.1 Trees on site all post-date the original building, likely by a century at least. The most significant tree on site is the walnut (T3 – see photograph 3, Appendix 3) which is within 4 m of the construction area. Two other trees, a Lawson cypress (T1 – see photographs 1 & 2, Appendix 3) and a small crab apple (T2 – see photograph 3, Appendix 3) are growing immediately adjacent to the existing driveway which passes over respectively, the western and eastern sides of their calculated RPAs. The fourth tree – a Portugal laurel (T4 – see photographs 7 & 8, Appendix 3), is growing close to the dwelling house front elevation and should not be adversely affected by the works.

2.3 The arboricultural issues in relation to this site are highlighted below with accompanying recommendations provided in Appendix 1 – Tree Survey Schedule.

2.4 **Documents provided**: The British Standard requires that trees within the specified stem diameter multiplier distance are included in the survey, the trees inspected are within that distance. I have been provided with the documents listed below:

- Location Plan and Block Plan – Drawing No. 061 (OS)000 P1 – Prepared by: raydan watkins architects ltd

2.5 **Ecological Constraints**: Impacts on wildlife must be considered prior to and during any tree works deemed necessary. Such matters are governed by various pieces of primary legislation, specifically:

Conservation of Habitats and Species Regulations 2019
EC Habitats Directive
Environment Act (2021) – Schedule 14 Para 6 2006

ODPM Circular O6/05 Para 99
Natural Environment and Rural Communities (NERC) Act
Natural Planning Policy Framework (as amended 2021) Clause 15 Paras 174, 180 & 188
Town and Country Planning (Environmental Impact Assessment Regulations 2017)
Town and Country Planning Act 1990
Town and Country Planning (Trees) (England) Regulations 2012
Wildlife and Conservation Act (1981)
Additional Subordinate legislation and guidance should be considered including:
Ancient Woodland Inventory (Natural England)
Ancient Tree Inventory (Woodland Trust)
Chartered Institute of Ecology and Environmental Management (CIEEM) Guidance
Biodiversity 2020 'A Strategy for England's Wildlife and Ecosystem Services (2011)'
BS 42020: 2013 Biodiversity: Code of Practice for Planning and Development
(The) England Tree Strategy
Forestry Commission Standing Advice
(A) Green Future: Our 25 Year Plan to Improve the Environment (UK Government)
Natural Forest Strategy (National Forest Company)
Natural Vegetation Classification (NVC) JNCC
Natural England Standing Advice
UK Biodiversity Action Plan (UKBAP)
UK Forestry Standard
UK Woodland Assurance Standard

2.6 **Statutory Tree Protection**: I have contacted the Local Planning Authority which in this instance is Huntingdon District Council to ascertain the existence, or otherwise of any Tree Preservation Orders which may be applied to this site, or whether the site falls within a designated conservation area. The local authority's web site shows the Walnut tree (T3 in this report) is specifically protected by Tree Preservation Order No. 006/87 – T1, and the site also appears to lie within a designated conservation area (see Appendix 6 'A Brief Explanation of Tree Preservation Orders/ Conservation Areas' at the back of this report). The status of the tree preservation order and conservation area legislation is only confirmed at the time of writing.

2.7 **Qualifications and professional experience**: This report is based on my site inspection and assessment of the existing trees. I hold formal qualifications in arboriculture and have the benefit of fifty-three years professional experience in this discipline. A summary of these matters is enclosed as Appendix 2.

2.7.1 The proposed works essentially involve remodeling of the existing house and the barn annex with demolition and reconstruction of the extended area to the opposite, eastern, end. Works to the western end will take place within the calculated RPA of T1 (walnut). The works will not extend the existing building footprint which will, by default, have restricted the root spread of the walnut tree – because this section would have been built when T1 was already fully mature. Ground compaction should not be an issue due to the longstanding hard surface of the driveway. This has clearly been in place for many years and extends up to less than I m from the tree trunk. It is therefore clear that the primary concern here is mechanical damage caused by machinery, plant, or on-site personnel. Such damage will be prevented by physical barriers placed as far as is practicable from the trunk periphery.

2.8 **Soils**: I accessed the United Kingdom Soil Observatory web site to gain insight into the type of soil present here. The web site showed that the soil depth was Deep with a texture of Loam to Clayey Loam the parent material from which this has evolved by the 'weathering process' is described as Glacial Till. This material is unlikely to be subject to desiccation and concomitant shrinkage. The UKSO website is generally a good guide to soil type within a general area but is not site-specific. Site soil testing by way of trial pits, boreholes, and technical analysis is the recognized way to obtain truly accurate site-specific results.

2.9 **Inspection of trees on site**: I inspected four individual trees on this site. Tree details are summarised in the tree schedule at Appendix 1.

3 Arboricultural Method Statement

3.1 **Introduction:** Plans for the building works referred to earlier have been approved and planning permission has been granted. However, Huntingdonshire District Council have imposed a condition that a Tree Protection Plan be provided before any works begin. This Arboricultural Method Statement includes text to guide on the implementation of effective tree protection and includes a plan which illustrates this graphically. Working documents used in the preparation of this AMS have included:

BS 5837:2012- Trees in relation to design, demolition and construction – Recommendations.
Hillier's Manual of Trees and Shrubs
National Joint Utilities Group Volume ,4 Issue 2.

3.2 **Plan TPP SAL/RWA/BCRBH/12248**: The tree protection plan (TPP) which is included as Appendix 7 is illustrative only and may exclude various on-site features. I have prepared the plans myself using scaled measurements from the plans prepared by raydan watkins architects ltd, and prepared these plans specifically to address potential tree/construction process issues. My measurements are as accurate as possible but as an aid to quality control I advise that all scaled measurements be checked against the submitted documents. The precise location of all tree protection measures including barriers and ground protection should be confirmed at the pre-commencement site meeting before any significant demolition or construction activity begins. Methods for working within tree RPAs are detailed in section 3.4 and the placement of tree protection barriers is specified in 3.2.1 while also being shown on the tree protection plan (see Appendix 7).

3.2.1 **Tree protection barriers**: On this site tree protection barriers shall be placed to the northwest of T1 (Lawson cypress) – though not to the full outer extent of this tree's calculated RPA, and other smaller shrubs to exclude any building operations from areas close to the tree trunks/shrub bases. A single barrier will be installed to the east of T2 (crab apple – see photograph 3, Appendix 3). T3 (walnut), which is the most visible and high-profile tree on site (see photograph 4, Appendix 3), will be protected by barriers to the northeast and others arranged so as to form a 'box' around the tree trunk (see photograph 6, Appendix 3). This will protect the tree trunk and scaffold branches from impacts and resultant mechanical damage.

3.2.2 **Ground protection**: No ground protection will be needed as the existing driveway is hard-surfaced which will provide effective protection against ground compaction.

3.2.3 **Special Construction Methods**: These will be employed within the calculated RPA of T3 (walnut) to ensure that damage is not caused during the building renovation works. This will mean that any excavation, demolition or construction works will be undertaken by hand, and no heavy plant – more than 250 kg – is used within the calculated RPA of T3 (walnut). Any scaffolding will be erected carefully by hand to pass between any overhanging branches of the walnut tree. Areas for Special Construction Methods will be clearly marked on the Tree Protection Plan.

3.3 **Design of the barriers:** Tree protection barriers will be installed in compliance with the requirements of BS 5837:2012 Trees in relation to design, demolition and construction – Recommendations (p19, 20, 21 & 22) (see Appendix 9).

3.4.1 It is not only direct protection of the tree RPAs that is needed. Other construction activities that may impact adversely upon trees include:

- movement of plant and machinery;
- storage of materials;
- the location of site huts and welfare facilities; and the
  mixing of mortar and concrete with associated 'washout-residues'.

Any mixing of concrete and storage of materials and plant shall be confined to the areas that are marked with blue hatching on the tree protection plan (see TPP Appendix 8).

3.4 **Methodology for working in RPA's:** On this site works will take place within the RPAs of three retained trees, specifically:

T1 – Lawson cypress
T2 – Crab apple
T3 – Walnut
Special Construction Methods shall be used in these areas to prevent mechanical or other damage to the tree trunks and scaffold branches.

3.5 **Site works that may impact upon retained trees**

3.5.1 **Tree work recommendations:** Two trees will need to be pruned so that their lower lateral branches are not damaged by passing construction traffic, necessary works are set out below:

T1 (Lawson cypress) – lateral branches on the western side to be pruned off up to 4 m above ground level (see photographs 1 & 2, Appendix 3)
T2 (crab apple) – the first lower easterly-growing lateral branch to be reduced by 1 m and higher, smaller branches on this side lightly pruned to achieve a proportionately shaped and flowing form (see photograph 3, Appendix 3).

3.5.2 **Operations on the temporary access road**: The access routes for ingress and egress to the site are clearly marked on the Tree Protection Plan (see TPP, Appendix 7). No vehicle greater than 7.5 tonne GVW shall enter the driveway. Similarly, plant weight on site shall be restricted to one tonne: this will mean that nothing bigger that a micro-digger and similar sized dumper truck will be permitted on site.

3.5.3 **Secondary access to the working area**: Arisings from, and materials to the working area at the eastern building end will need to be moved across proprietary ground-protection mats placed over the existing grassed area. This route too, will be clearly marked on the Tree Protection Plan.

3.5.4 **Site huts, welfare facilities, toxic run off**: Site huts, welfare facilities and activities that may generate toxic run-off will be sited within the areas marked with blue hatching on the Tree Protection Plan. If necessary the grassed area between the secondary site access, the side boundary and the tree protection barriers northwest of the front hedge-line can be used for material storage and ancillary working. Ground protection mats will need to be used to prevent compaction and any liquid or mineral run-off entering the ground below. These can be hired from plant hire companies.

3.5.5 **Services:** These will connect to those already present in the existing building. Therefore, no new excavation works will be needed.

3.6 Programme of works

3.6.1 Works shall be undertaken in such a way that minimises adverse effects to the retained trees. The following methodology shall be employed:

i) Install the tree protection barriers as specified on the TPP.
ii) Install the ground protection mats over the grassed area.
iii) Install site huts, welfare facilities and designated storage/working areas within the hard-surfaced areas to the front of the existing building.
iv) Demolish the eastern side extension, removing all arisings across the ground-protection mats to the existing driveway and thence off site.
v) Erect the new extension superstructure and perform the secondary renovation work.
vi) Remove all surplus building materials, plant and machinery off site.
vii) Remove the tree protection barriers and ground protection mats.

3.7 Tree protection and supervision

3.7.1 **Overview**: Effective tree protection requires input from an arboricultural professional. In this instance, the local authority condition has not specifically specified arboricultural supervision. Provided that the advice within this report is followed there should be few adverse effects on tree health.

3.7.2 **Effective arboricultural supervision and the discharge of planning conditions**: A retained arboricultural consultant may assist in the discharge of any arboricultural planning conditions imposed by the Local Planning Authority. Within this project it is the site supervisory personnel that will undertake the monitoring of working methods and report any breaches of the tree protection to the local authority. Due to most of the working area being hard-surfaced I consider it improbable that significant breaches will occur.

3.7.3 **Stages of arboricultural advice and supervision**: Integrated arboricultural involvement can be an effective tool in addressing all tree related issues once consent for the development is confirmed. The following stages of the development project should involve the arboricultural consultant.

i) **Initial planning preparation in relation to trees**:
The development that is implemented is often very different to that which was originally envisaged. Planning is frequently an evolving process which changes in response to issues and constraints that arise as the design process moves forward. An arboricultural consultant instructed early in the process can assist in the integration of tree issues into the overall site management. The consultant can advise on effective measures, sometimes in ways that may save expense and time and ensure that delays are minimized. Discussion between the arboricultural consultant and the development team should begin at an early stage in-order to effectively manage tree issues and avoid unnecessary delays.

ii) **Post survey site visit**: Prior to any works beginning, a meeting should be held preferably on site, between the site manager, arboricultural consultant and the Local Planning Authority tree officer or other planning department representative. Minutes of the meeting should be taken and written up before being filed as part of the development monitoring process. Tree protection measures should be fully discussed at this meeting so that their purpose and means of implementation are understood by all sides. At this meeting any clarifications or alterations to the planning consent details should be agreed and recorded. Final details of the tree protection measures should be agreed and the basis of any supervision measures between the arboricultural consultant and the developer will be derived from this.

iii) **Arboricultural supervision**: Soon after commencement of site activity the arboricultural consultant should visit in accordance with a pre-prepared schedule of supervision. It may be necessary to arrange ad-hoc visits to address contentious issues should these arise. The arboricultural consultant may be viewed as a link between the developer and the Local Planning Authority. It will be the arboricultural consultant's role to ensure that the protective measures as designed and submitted are in place and providing effective protection before work begins. Subsequently the arboricultural consultant's role will be to monitor compliance with any conditions imposed by the Local Planning Authority and providing advice on any tree related problems that may arise, formulating solutions or modifications as necessary.

3.7.4 **Site Management**: The details of this arboricultural method statement and any subsequent amendments must be known and understood by all site personnel. It is the responsibility of the developer to ensure that the details of the method statement are made known to all personnel who may cause harm to any retained trees. An effective method of providing the information to such persons would be to issue them with copies of the documents. This should be done as part of the site induction process and written into appropriate site management procedures. All recipients of the document should sign to confirm receipt of the document and that they understand the content and requirements.

4 Key to Tree Survey Data

4.1 **Tree No**: Tree numbers correlate with those shown on the Tree Survey Plan. Most trees are shown as individuals though some are identified as groups in which case the prefix is G rather than T.

4.2 **Species**: These are identified within the tree schedule by their common name – e.g. Lime rather than *Tilia x europea* - Scientific nomenclature is listed below.

- Crab apple: *Malus sylvestris* (L.) Mill.
- Portugal laurel: *Prunus lusitanica* L.
- Lawson cypress: *Chamaecyparis lawsoniana* (A. Murray bis) Parl.
- Walnut: *Juglans regia* L.

4.3 **Age Class**: An assessment of the relative life stages of the tree where Y = young (first one third of life expectancy), MA = middle aged (second one third of life expectancy), M = mature (final one third of life expectancy, OM = over mature (beyond life expectancy and declining naturally) and V = veteran (of great age for its species and possibly of high conservation value).

4.4 **Height (est) (m)**: The height of the tree is measured or estimated to the nearest metre.

4.5 **Crown base**: Height above ground level of the lowest section of true crown (not epicormic and sucker growth).

4.6 **Stems**: This column classifies trees as either single, or multi-stemmed. Any tree That has more than one stem arising below 1.5m above ground level is classified as multi- stemmed. Designations are either S = single or M = multi.

4.7 **Crown spread, (estimated in metres) NSEW**: Generally estimated by pacing and given as the spread at the four cardinal compass points. If trees are located outside the site only the side which overhangs the working area is measured.

4.8 **Diameter @ 1.5m above ground level (mm)**: Measured at 1.5m above ground level for single stemmed trees, if this is not possible the measurement height is stated. If the trees are off site or inaccessible then an estimated measurement is provided. When trees are multi-stemmed the measurement is taken in line with the requirements of BS 5837.

4.9 **Conditions & Observations**: Basic condition assessments are made in line with the BS 5837: classifications. Whilst this is not a tree condition survey in the fullest sense the presence of any significant growth defects, hazardous conditions or visible signs of disease will be noted.

4.13 **Preliminary Management Recommendations**: These are intended to identify necessary remedial works for trees in their current context. They are not designed to facilitate development, nor are they intended to be a schedule of work needed prior to development. Certain recommendations may require further and more advanced survey and inspection work with use of tree decay detection devices and /or climbing inspections.

4.14 **Retention span**: These are assessed in line with the BS 5837 classification.

4.15 **Grade**: Classification according to BS 5837, 2012 specifically.

4.12.1 U-Trees that are in poor condition and with a useful life expectancy of less than 10 years. In their current context these trees would require removal within ten years in accordance with sound arboricultural management especially where there are implications relating to safety and disease management. U trees are marked in red on the survey plan.

4.12.2 A- Only the very best trees with minimal defects and capable of remaining a significant arboricultural asset for at least 40 years will qualify in this category. These trees are marked on the plan as light green.

4.12.3 B-This category of trees is of lower value than A trees and may have significant though remedial defects. The trees must be capable of remaining as a useful site asset for a minimum of 20 years and are marked as blue on the tree survey plan.

4.12.4 C-These are trees of low value with no particular merit which should not normally be a significant constraint to development. They should, in most cases, be able to provide a contribution to site amenity for 10 years or more. Trees less than 150mm diameter are also described as C category. These are marked on the plan as grey.

4.12.5 All the categorised trees can be allocated sub categories e.g. sub category 1 refers to significant arboricultural value, sub category 2 to landscape values and sub category 3 is concerned with cultural or conservation values. Whilst it could be considered that 'C' trees have no value and should not be allocated sub categories site owners or future owners may wish to retain these trees and the sub categorisation could therefore provide useful information.

4.12.6 All sub categories carry equal weight so that no category is more important than another. Trees can be allocated more than one category if this is deemed appropriate.

5. Assumptions and Limiting Conditions

5.1 Any legal description provided to the consultant/appraiser is assumed to be correct. Any titles and ownerships to any property are assumed to be good and marketable. No responsibility is assumed for matters legal in character. Any and all property is appraised or evaluated as though free and clear, under responsible ownership and competent management.

5.2 Care has been taken to obtain all information from reliable sources. All data has been verified insofar as possible, however, the consultant/appraiser can neither guarantee nor be responsible for the accuracy of information provided by others.

5.3 The consultant/appraiser shall not be required to give testimony or attend court by reason of this report unless subsequent contractual arrangements are made, including payment of an additional fee for such services as described in the fee schedule and contract of engagement.

5.4 Loss or alteration of any part of this report invalidates the entire report.

5.5 Possession of this report or a copy thereof does not imply right of publication or use for any purpose by any other than the person to who, it is addressed, without the prior expressed written or verbal consent of the consultant/appraiser.

5.6 Neither all nor any part of the contents of this report, nor copy thereof, shall be conveyed by anyone, including the client, to the public through advertising, public relations, news, sales or other media, without the prior expressed written or verbal consent of the consultant/appraiser particularly as to value conclusions, identity of the consultant/appraiser, or any reference to any professional society or institute or to any initialled designation conferred upon the consultant/appraiser as stated in his qualification.

5.7 This report and values expressed herein represent the opinion of the consultant/appraiser, and the consultant's/appraiser's fee is in no way contingent upon the reporting of a specified value, a stipulated result, the occurrence of a subsequent event, nor upon any finding to be reported.

5.8 Sketches, diagrams, graphs, and photographs in this report, being intended as visual aids, are not necessarily to scale and should not be construed as engineering or architectural reports or surveys.

5.9 Unless expressed otherwise, (1) information contained in this report covers only those items that were examined and reflects the condition of those items at the time of inspection; and (2) the inspection was by means of visual examination of accessible items.

6. Certification of Performance

[redacted] certify that:

6.1 I have personally inspected the trees and the property referred to in this report and have stated my findings accurately. The extent of the evaluation or appraisal is stated in the attached report and the Terms of Assignment.

6.2 I have no current or prospective interest in the vegetation or the property that is the subject of this report and have no personal interest or bias with respect to the parties involved.

6.3 The analysis, opinions and conclusions stated herein are my own and are based on current scientific procedures and facts.

6.4 My analysis, opinions, and conclusions were developed and this report has been prepared according to commonly accepted arboricultural practices.

6.5 No one provided significant professional assistance to me, except as indicated within the report.

6.6 My compensation is not contingent upon the reporting of a predetermined conclusion that favours the cause of the client or any other party nor upon the results of the assessment, the attainment of stipulated results, or the occurrence of any subsequent events.

6.7 I further certify that I am a Chartered Arboriculturist being a professional member of the Institute of Chartered Foresters and a Registered Consultant of that professional body. I am a Registered Consultant of the Arboricultural Association, and a Registered Consulting Arborist (#588) of the American Society of Consulting Arborists. I am also an ISA Board-Certified Master Arborist and hold the Royal Forestry Society Professional Diploma in Arboriculture. In matters of tree inspection, I hold the LANTRA Professional Tree Inspection Module with integrated assessment and update training. I have worked full time in the field of Arboriculture for a period of fifty-three years.

[redacted]

[redacted] **– Chartered Arboriculturist**
MICFor, Dip.Arb.(RFS), M.Arbor A, RCArborA – ISA - BCMA, CUEW,
ASCA Registered Consulting Arborist #588

APPENDIX 1 - TREE SURVEY SCHEDULE

Tree Ref No.	Species # Third-party owned	Height(m)	Stem Diameter (mm) Root Protection Area (m2) Radius of Root Protection Area	Crown base (lowest significant point above ground) (m)	Branch Spread (m)	Age Class	Physiological/ Structural Condition	Comments * Preliminary Management Recommendations	Estimated Remaining Useful Contribution (years)	Category Grading
T1	Lawson cypress	8.4	420 mm 79.80 m^2 5.04 m	2.2 N	N = 2.0 E = 1.5 S = 2.0 W =2.5	M	Good/Good	Recently lightly reduced in height, grows favourably westwards, hard-standing over west side (see Photographs 1 & 2, Appendix 3) *None	20+	B1
T2	Crab apple	4.0	140 mm 8.87 m^2 1.68 m	2.0 E	N = 2.0 E = 2.2 S = 1.0 W =2.0	M	Good/Good	Grows favourably eastwards over the driveway (see Photograph 3, Appendix 3) *Reduce east side of crown by 1 m,	20+	**B2**
T3	Walnut	13	600 mm at 1 m above ground level 162.86 m^2 7.20 m	3.0 SW	N = 5.0 E = 6.0 S = 7.0 W = 6.0	E/ M	Fair/Fair	Bifurcates at 1.8 m into two similar-sized stems, historically crown lifted to 3.5 m, wounds fully occluded, northwest side has been minorly reduced in height moderate small diameter deadwood throughout the crown (see Photographs 4, 5 & 6, Appendix 3) *None	40+	B1

APPENDIX 1 - TREE SURVEY SCHEDULE

Tree Ref No.	Species # Third-party owned	Height(m)	Stem Diameter (mm) Root Protection Area (m2) Radius of Root Protection Area	Crown base (lowest significant point above ground) (m)	Branch Spread (m)	Age Class	Physiological/ Structural Condition	Comments * Preliminary Management Recommendations	Estimated Remaining Useful Contribution (years)	Category Grading
T4	Portugal laurel	4.0	150 mm 10.18 m² 1.80 m	1.9 E	N = 1.0 E = 1.5 S = 1.0 W = 1.0	M	Fair/Good	Unremarkable Portugal laurel (see Photographs 7 & 8, Appendix 3) *None	40+	C1

Age Class: EM = Young (first third of life expectancy); M = Middle Aged (second third of life expectancy); OM = Over Mature (beyond life expectancy and declining naturally); V = Veteran (of great age for its species and possibly of conservation value)

Condition: P = Physiological; Good = no significant physiological problems; Fair = symptoms of ill health that can be remediated; Poor = significant ill health
S = structural; Good = no significant structural problems; Fair = significant defects that can be remediated; Poor = significant defects – no viable remedial action

- Third-party tree

Priority Category = U = URGENT WORKS - 1 = within one year - 2 = within two years - 3 = within three years - N/A = No Action
Zone A - Trees located close to and specifically within falling distance of adjacent properties, built structures and areas of high use – Inspection to be annual by a qualified arborist.
Zone B - Trees located within gardens and open areas though not adjacent to roads - Inspection to be biennially by a person with an appropriate and working knowledge of trees and tree structural defects.

APPENDIX 2 - PERSONAL DETAILS OF SHANE A LANIGAN

Qualifications: I hold the City and Guilds Certificate in Tree Surgery and am an International Society of Arboriculture Certified Arborist, also holding the International Society of Arboriculture Municipal Arborist Accreditation and being a Board- Certified Master Arborist of that professional body.

In addition, I hold the Royal Forestry Society's Professional Diploma in Arboriculture which is a degree level qualification rated as level 6 on the qualifications and curriculum framework. It is a qualification specific to the arboricultural profession. In matters of tree safety and risk assessment I have undertaken and completed the LANTRA Awards Professional Tree Inspection Course and integrated assessment, I also hold the International Society of Arboriculture Tree Risk Assessment Qualification (TRAQ).

I am a registered consultant of the American Society of Consulting Arborists (ASCA RCA#588), a Chartered Arboriculturist, being a Professional Member of the Institute of Chartered Foresters and a Registered Consultant of the Arboricultural Association.

Regarding legal issues, I can confirm that I am also a Cardiff University Law School Certified Expert Witness in both civil and criminal proceedings.

My professional memberships include:

- The American Society of Consulting Arborists
- The Arboricultural Association
- The Consulting Arborist Society
- The International Society of Arboriculture
- The Institute of Chartered Foresters
- The Royal Forestry Society

Career details: I am a second- generation arborist having worked from 1971 to 1979 for a private tree care company before forming my own arboricultural company in 1979.

Continuing professional development: I maintain and improve my professional knowledge by being an active member of the five professional bodies referred to above. In addition, I attend a high number of arboriculture related seminars and the annual conferences of the International Society of Arboriculture, the Arboricultural Association and the Institute of Chartered Foresters (ICF). I was also privileged to serve on the credentialing council of the International Society of Arboriculture educational certification department for seven years. Having served two consecutive terms as an elected member. I 'rolled off' the council in late 2020.

Currently, I am the senior consultant within Abbots Arboricultural Advice Limited. This is my consulting practice which is a forward-looking operation. In-order to keep abreast of changes in arboriculture and consulting practice I attend many conferences and seminars which contribute to my CPD/CEU obligations.



[redacted] – Chartered Arboriculturist
MICFor, Dip.Arb. (RFS), M.Arbor A, RCArborA – ISA - BCMA, CUEW,
ASCA Registered Consulting Arborist #588

APPENDIX 3
Photographs: 1 – 13



PHOTOGRAPH NO. 1 – T1 – Lawson cypress viewed from the south



PHOTOGRAPH NO. 2 – T1 – Lawson cypress viewed from the northwest



PHOTOGRAPH NO. 3 – T2 – Crab apple viewed from the east



PHOTOGRAPH NO. 4 – T3 – Walnut viewed from the southwest



PHOTOGRAPH NO. 5 – Driveway around the north and east sides of T3



PHOTOGRAPH NO. 6 – Driveway around the south side of T3



PHOTOGRAPH NO. 7 – T4 – Portugal laurel viewed from the south



PHOTOGRAPH NO. 8 – Existing footpath to the front (south) of T4

APPENDIX 4

References:

BS 5837:2012 British Standards Limited (2012) *Trees in relation to design, demolition and construction – Recommendations* 4th ed. 2 Park Street, London W1A 2BS. British Standards Institution.

Hillier J G (2014). *The Hillier Manual of Trees and Shrubs*. 14th ed. 80 Vincent Square, London SW1P 2PE;(Hillier Nurseries and The Royal Horticultural Society).

NHBC Standards (2024). *NHBC Standards Effective 1 January 2024*. NHBC House, Davy Avenue, Knowhill, Milton Keynes MK5 8FP: NHBC.

UK Soil Observatory – British Geological Survey - https://www.bgs.ac.uk/map-view - accessed December 2024

APPENDIX 5

PROGRAMME OF ARBORICULTURAL INPUT:
BROOKLANDS, CAUSEWAY ROAD, BROUGHTON,
HUNTINGDON PE28 3AS

Arboricultural action	Programme of action	Extent of arboricultural input	Nature of supervision	Signed off (LPA use)
Pre- start meeting with arboriculturist, site agent, LPA tree/planning office	Review plans and any alterations that may have been made	Meeting on site Review plans and any alterations that have been made Check status of tree protective measures	Site meeting and letter/email	
Access facilitation/remedial tree works carried out	Before protective measures are installed	Meeting to assess and ensure competence of contractor, particularly if works are carried out prior to installation of protective fencing	Site meeting and letter/email	
Completion and agreement of the form and extent of tree protection measures, this must be agreed by the LPA	Before any heavy machines enter the site	Meeting to agree the final extent and configuration of the tree protection, provide photographic and documentary evidence of such protection	Site meeting and letter/email	
Demolition	After protective measures are installed	Meeting to discuss means of compliance with submitted arboricultural method statement	Site meeting and letter/email	
Services installation	At the discretion of the developer	Meeting to ensure that appropriate no-dig boring methods or careful hand digging techniques are employed to avoid damage to the roots of retained trees. The contractor must work to the methodologies described within the arboricultural method statement	Site meeting and letter/email	
Installation of new structures	These works must only begin after the tree protection measures have been installed and their form and integrity are to the satisfactory of the LPA tree/planning officer	Meeting to ensure that the contractor property understands his role in avoiding damage to retained trees on site. Further visits by the appointed arboricultural consultant	Site meeting and letter/email	

APPENDIX 5

PROGRAMME OF ARBORICULTURAL INPUT:
BROOKLANDS, CAUSEWAY ROAD, BROUGHTON,
HUNTINGDON PE28 3AS

Arboricultural action	Programme of action	Extent of arboricultural input	Nature of supervision	Signed off (LPA use)
Removal of tree protection measures	Only when all construction work, including surfacing of roads and erection of gates, fences and other structures is completed. Such a state should be agreed with the LPA	Meeting to establish the need for protective measures is no longer extant	Site meeting and letter/email	
Soft and hard landscaping	Should only begin when construction is completed and tree protection measure have been removed	Meeting to brief the landscape contractor who may be new to the site, further supervisory visits by the arboriculturist may be necessary	Site meeting and letter/email	

APPENDIX 6

Statutory Tree Protection

Tree Preservation Orders/Conservation Areas

Tree Preservation Orders are made under Section 198C of the Town & Country Planning Act and applied by the 2012 Tree Regulations. They effectively prohibit unauthorised removal and pruning of trees identified within the order. Conservation areas are designated areas defined by geographic limits within which any tree with a stem diameter of more than 75mm (measured at breast height or 1.5m above ground level) is effectively protected. Certain exceptions exist under both sets of legislation, though these are limited and ideally require interpretation by a suitably qualified arboriculturist.

Felling Licenses

Felling licenses may apply for felling significant volumes of timber (5 cubic metres in any calendar quarter of which only 2 cubic metres may be sold) on sites without full planning permission. The statutory legislation in this case is the Forestry Act 1967 which is administered by the Forestry Commission.

Faculties

Faculties may be required for significant tree works on sites that fall under the jurisdiction of the church authorities. The local Parochial Church Council can advise on the need and requirements for faculties.

Hedgerow Management and Removal Notices

A hedgerow removal notice will be required for the removal of almost any hedge growing in a rural area. Certain works are permitted without notification including (j) "for the proper management of the hedgerow." The applicable statutory legislation may be cited as "The Hedgerow Regulations 1997" (Statutory Instrument 1997 No. 1160)

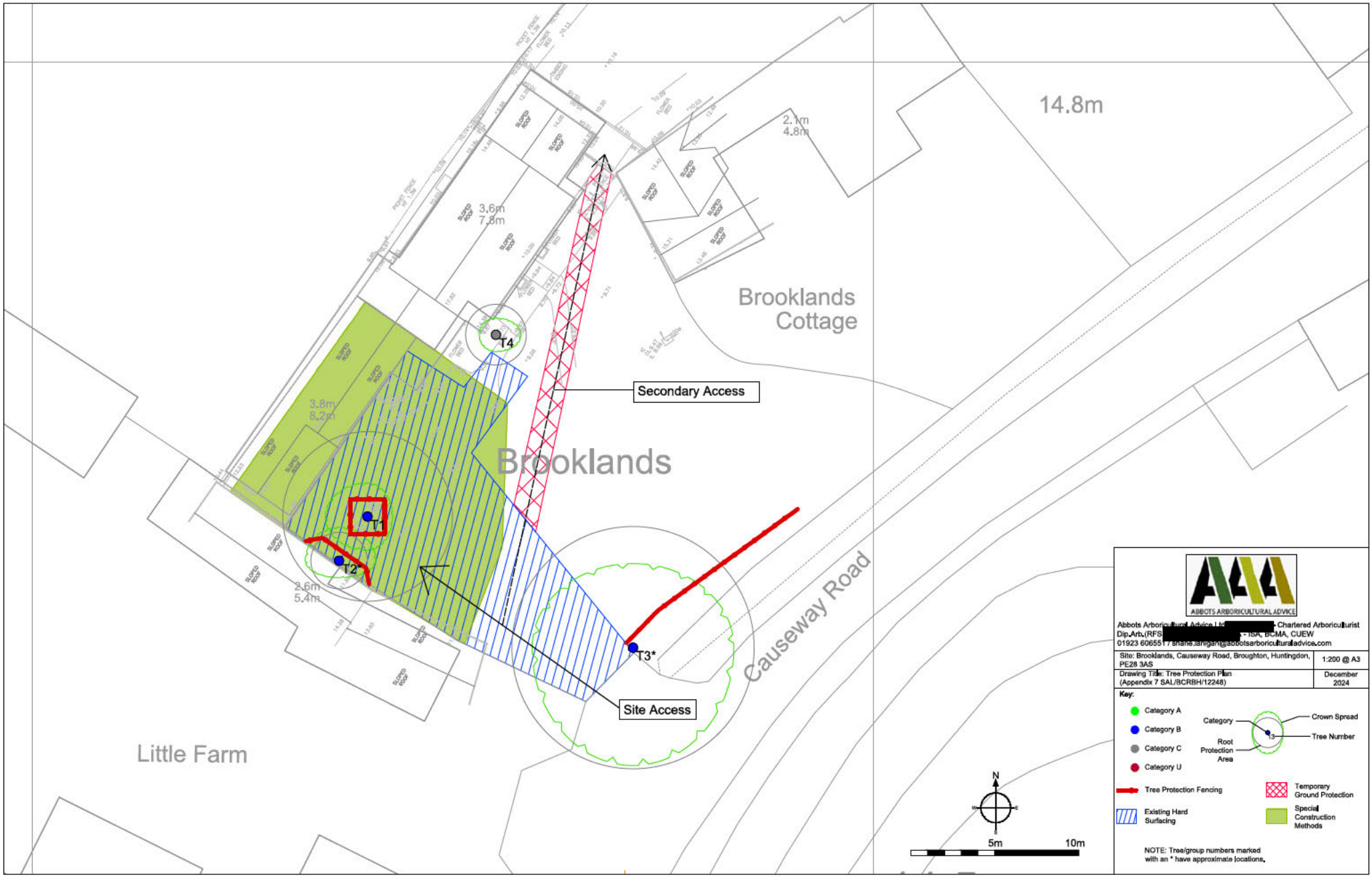
14.8m
2.1m
4.8m
3.6m
7.8m
Brooklands
Cottage
T4
Secondary Access
3.8m
8.2m
Brooklands
T1
T2*
2.6m
5.4m
T3*
Site Access
Causeway Road
Little Farm
N
W
E
S
5m
10m
ABBOTS ARBORICULTURAL ADVICE
Abbots Arboricultural Advice Ltd - Chartered Arboriculturist
Dip.Arb.(RFS - ISA, BCMA, CUEW
01923 6065517 shane.lanigan@abbotsarboriculturaladvice.com
Site: Brooklands, Causeway Road, Broughton, Huntingdon, PE28 3AS
1:200 @ A3
Drawing Title: Tree Protection Plan (Appendix 7 SAL/BCRBH/12248)
December 2024
Key:
Category A
Category B
Category C
Category U
Category
Crown Spread
Tree Number
Root Protection Area
Tree Protection Fencing
Temporary Ground Protection
Existing Hard Surfacing
Special Construction Methods
NOTE: Tree/group numbers marked with an * have approximate locations.

on retained hard surfacing or it is otherwise unfeasible to use ground pins, e.g. due to the presence of underground services, the stabilizer struts should be mounted on a block tray (Figure 3b).

NOTE 1 Examples of configurations for steel mesh perimeter fencing systems are given in BS 1722-18.

NOTE 2 It might be feasible on some sites to use temporary site office buildings as components of the tree protection barriers, provided these can be installed and removed without damaging the retained trees or their rooting environment.

6.2.2.4 All-weather notices should be attached to the barrier with words such as:

"CONSTRUCTION EXCLUSION ZONE – NO ACCESS".

Figure 2 **Default specification for protective barrier**

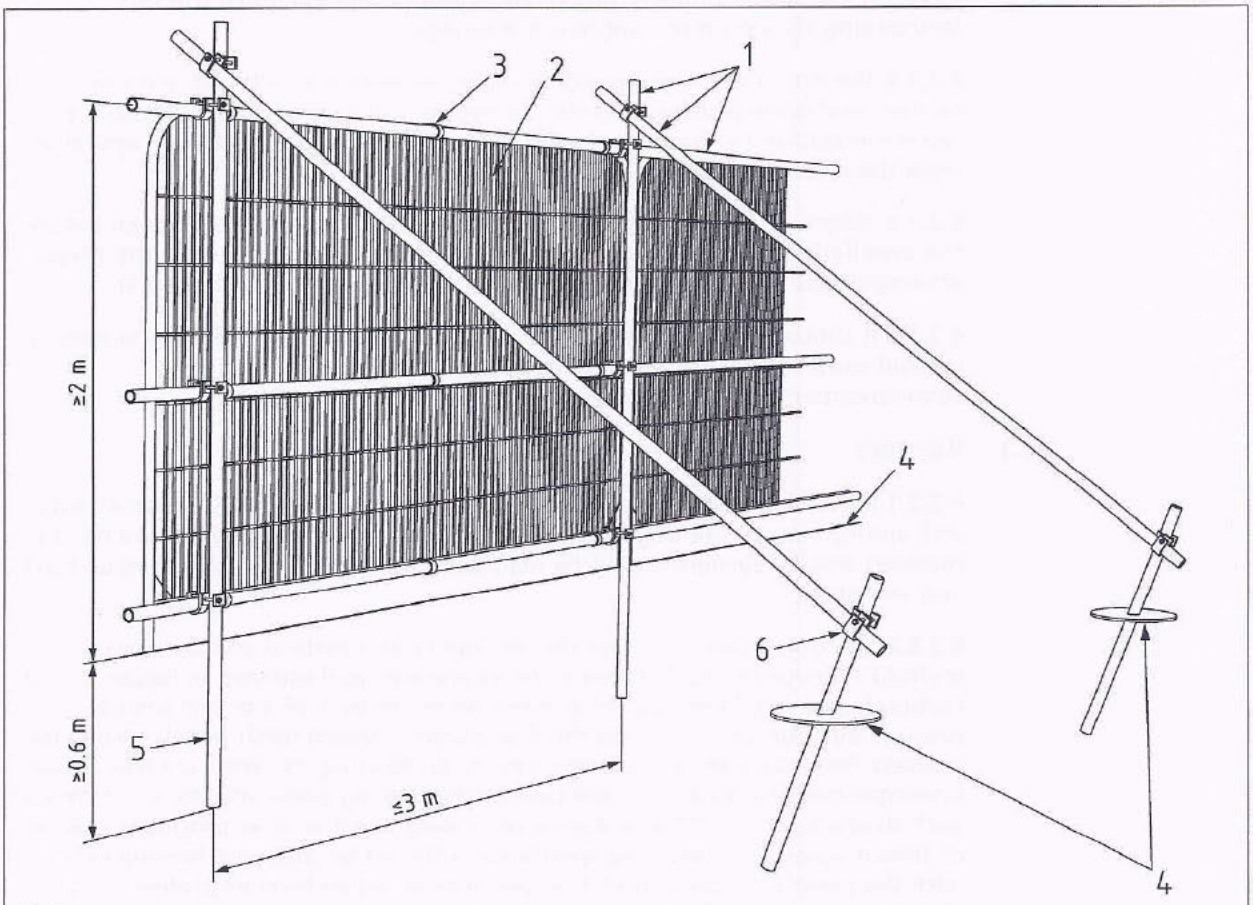

Key

1 Standard scaffold poles
2 Heavy gauge 2 m tall galvanized tube and welded mesh infill panels
3 Panels secured to uprights and cross-members with wire ties
4 Ground level
5 Uprights driven into the ground until secure (minimum depth 0.6 m)
6 Standard scaffold clamps

Figure 3 **Examples of above-ground stabilizing systems**

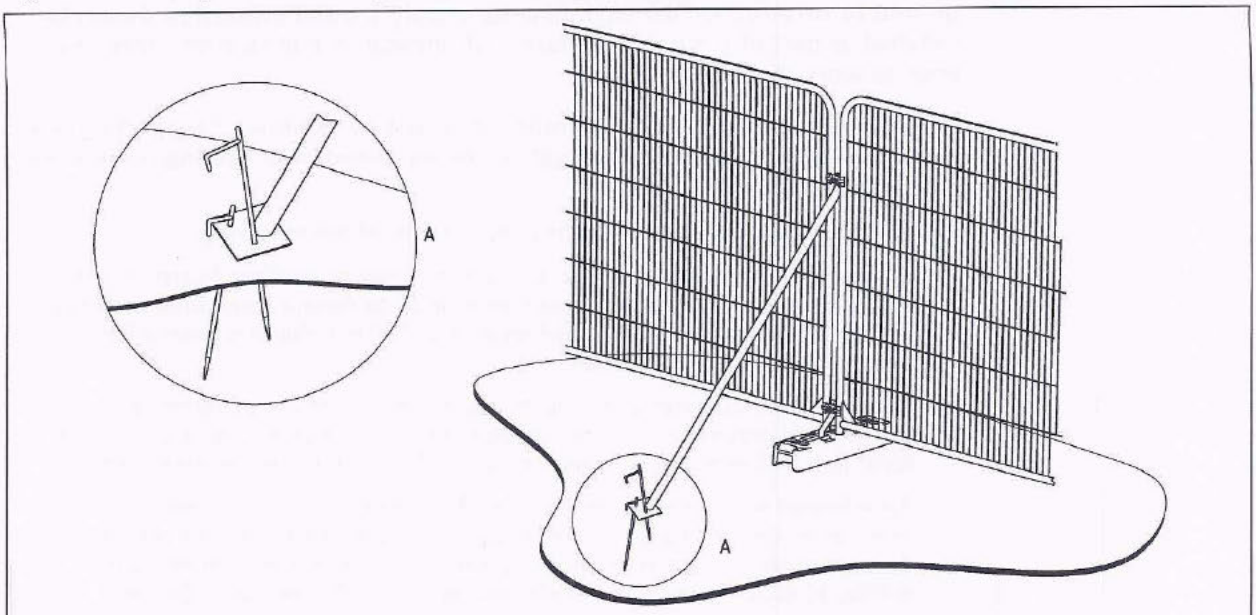

a) Stabilizer strut with base plate secured with ground pins

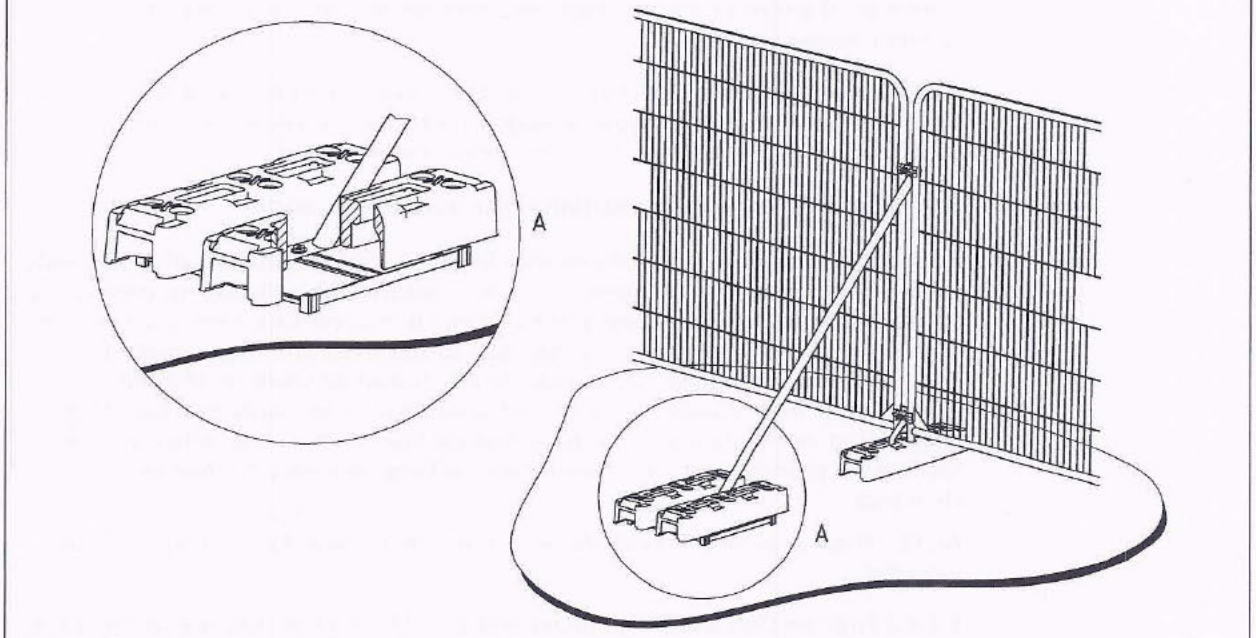

b) Stabilizer strut mounted on block tray

6.2.3 Ground protection during demolition and construction

6.2.3.1 Where construction working space or temporary construction access is justified within the RPA, this should be facilitated by a set-back in the alignment of the tree protection barrier. In such areas, suitable existing hard surfacing that is not proposed for re-use as part of the finished design should be retained to act as temporary ground protection during construction, rather than being removed during demolition. The suitability of such surfacing for this purpose should be evaluated by the project arboriculturist and an engineer as appropriate.

© The British Standards Institution 2012