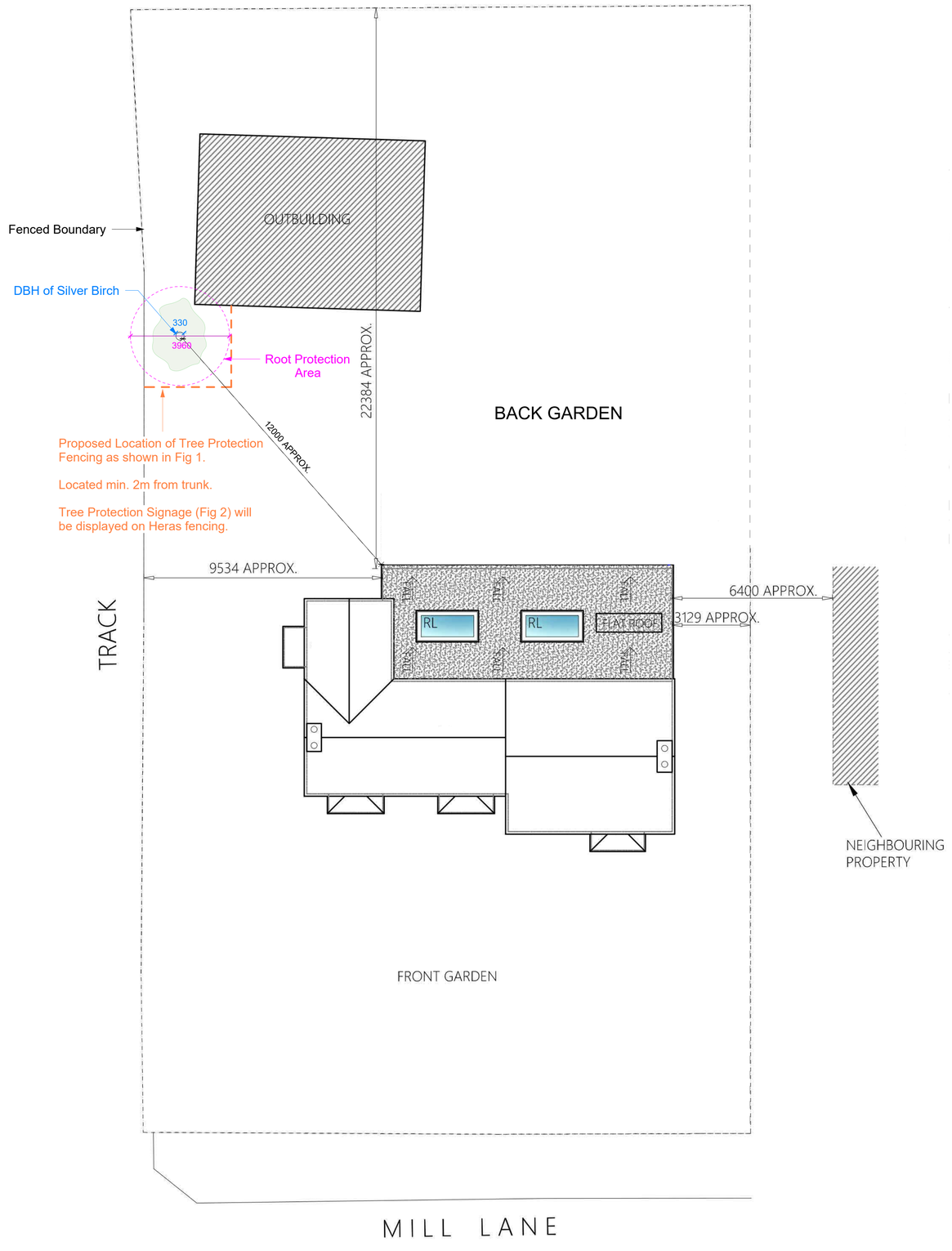

Tree Protection Site Plan
1 : 100

Scale 1:100
0 1 2 3 5m

THE GARDENS, MILL LANE, BLUNTISHAM
23/01931/HHFUL

Figure 1 ix 3: Fence protection Design and Signage

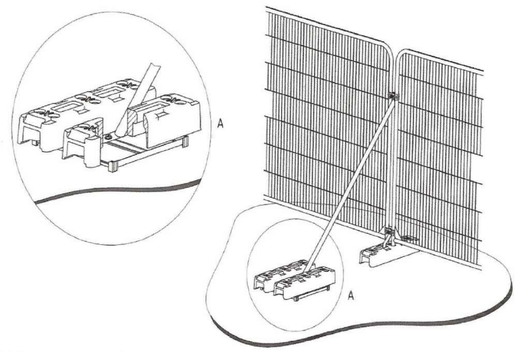

b) Stabilizer strut mounted on block tray



Tree Protection Area
Keep Out!

Figure 2: Tree protection signage

Job	The Gardens, Mill Lane, Bluntisham
Drawing	Tree Protection Plan
Scale	1 : 100 @A1
Revision	
type	-PL
number	-CON4