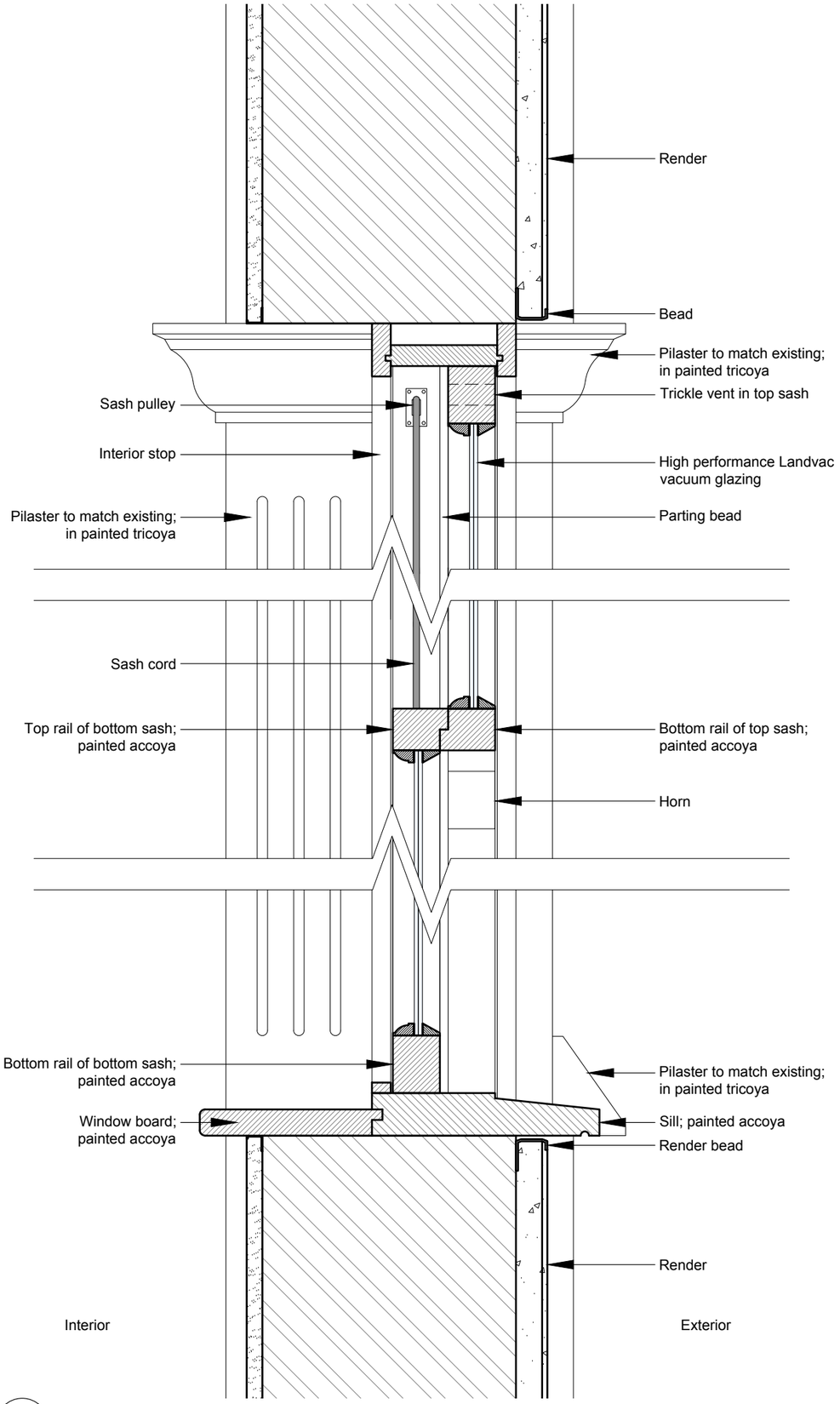

1 / 3000 Proposed Window - Head, Meeting Rail & Sill Details

1:5 @ A3

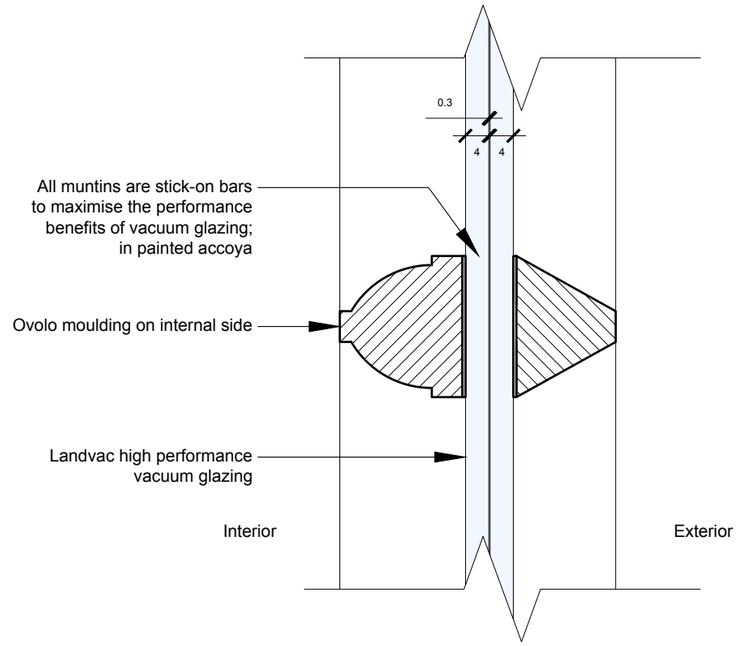

2 / 3000 Proposed Glazing Bar Detail

1:1 @ A3

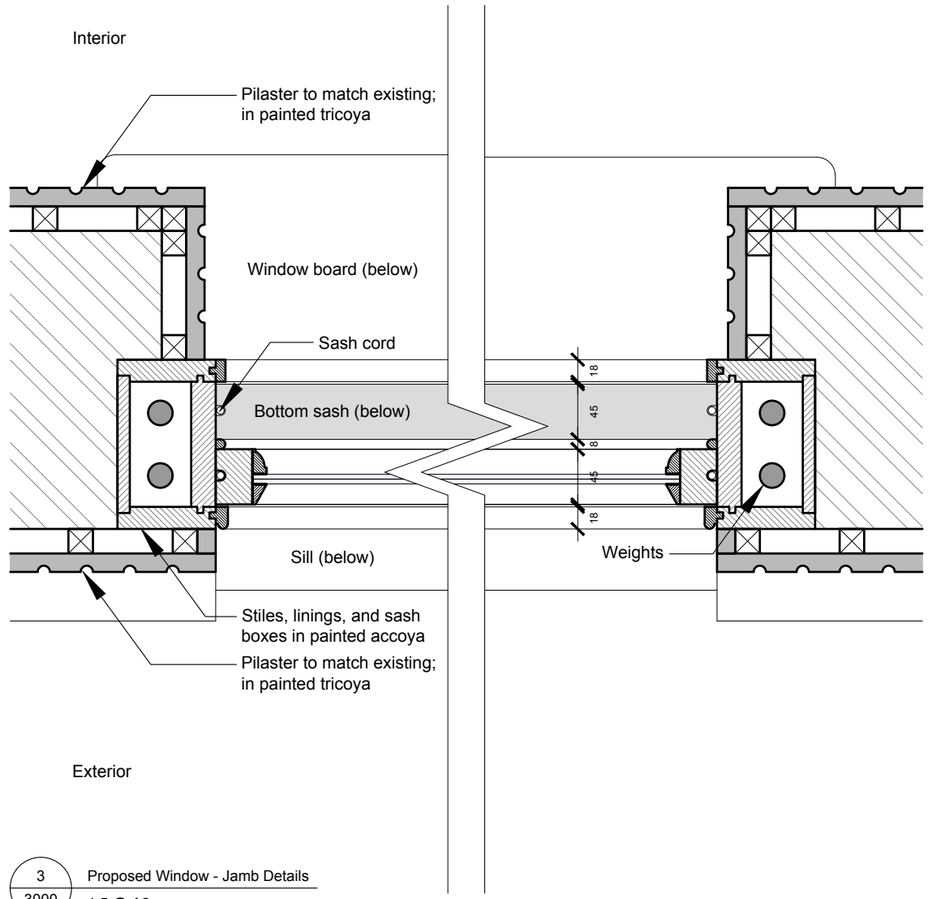

3 / 3000 Proposed Window - Jamb Details

1:5 @ A3

Notes:

Drawings are based on survey data and may not accurately represent what is physically present.

Scale from this drawing only for planning purposes. All dimensions are to be verified on site before proceeding with the work.

All dimensions are in millimetres unless noted otherwise.

Renew Studio shall be notified in writing of any discrepancies.

NOTE: Window openings are to be measured on site by manufacturers before production. These drawings are indicative and show design intent only. Renew Studio is not responsible for survey dimensions or as-built information.

0 10mm 20mm 30mm 40mm 50mm

1:1 Scale

0 50mm 100mm 150mm 200mm 250mm

1:5 Scale

RENEW studio

REV	DATE	BY	CHK	DESCRIPTION
P01	22.01.26	KA	CS	First Issue

CLIENT

Gary Hale

PROJECT

15 Kimbolton High Street

JOB NUMBER

0034

TITLE

Proposed Window Details

SIZE	SCALE	FIRST ISSUED	DRAWN	CHECKED
A3L	Various	22/1/26	KA	CS

REV **P01** SUITABILITY/REASON FOR ISSUE **Issued For Discharge of Conditions**

DRAWING NUMBER

0034-RS-00-ZZ-DR-A-3000