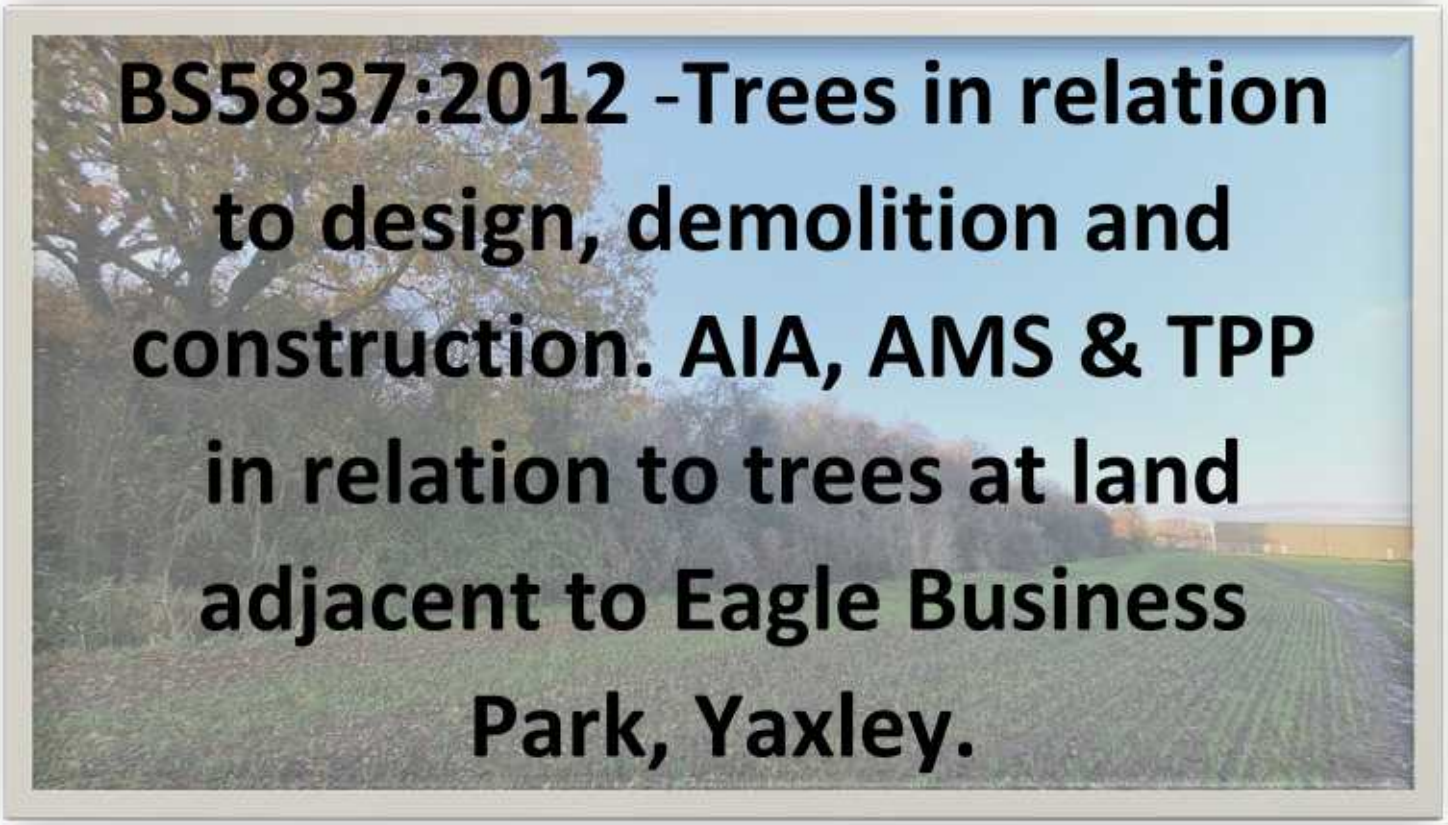

BS5837:2012 -Trees in relation to design, demolition and construction. AIA, AMS & TPP in relation to trees at land adjacent to Eagle Business Park, Yaxley.

Prepared by: East Midlands Tree Surveys Ltd.

Date: 15/11/2024

Contents

1. Instructions 1
2. Arboricultural Impact Assessment 1
3 Arboricultural Method Statement & Tree Protection detail. 1
3.1 Sequenced Methods of Demolition, Construction and Tree Protection 1
3.2 Phase 1 - Undertake Arboricultural Works 2
3.3 Phase 2 - Tree Protection Fencing 2
Appendix 1: Impact Assessment / Tree Protection measures 4
Appendix 2. Fence specification. 7
Appendix 3. Signs. 8



1. Instructions

This report was commissioned by Barnack Estates in relation to trees at land adjacent to Eagle Business Park, Yaxley with instruction to provide the following in line with *BS5837:2012 Trees in relation to design, demolition and construction - Recommendations.*

- An Arb Impact Assessment along with an Arb Method Statement and Tree Protection details.
- This document should be read in conjunction with the Tree Constraints report dated 28/11/22
- The proposed building footprints have not been provided however the principals remain the same and all construction will be outside the RPAs.

2. Arboricultural Impact Assessment.

See Appendix 1 for the Impact Assessment plans with the Root Protection Areas in grey.

The proposed layout shows that the Ash T3 will need to be removed in order to achieve the layout.

This tree is at best an average specimen and its loss will have no discernible negative impact on the landscape.

T1 will not require protecting during the construction Phase as there is a field drain between the tree and the site, the roots will not have travelled down and under the drain onto site, as such, it is considered that there will be no adverse effect.

T2 will be protected as per the AIA/TPP plans at Appendix 1, essentially the RPA will be marked out as a circle measured from the centre of the tree with a radius of 6.4m. The fence will then follow the extent of the RPA.

For G1, the fence will be set back 7m from the boundary.

Due to the end usage, the shade pattern is not considered to be a material consideration.

There is sufficient space on site for the storage of materials.

3 Arboricultural Method Statement & Tree Protection detail.

3.1 Sequenced Methods of Demolition, Construction and Tree Protection

With reference to relevant published guidance, the methodology of this statement follows a logical sequence essential to the efficacy of the protection measures. Reference may include: British Standard BS 5837:2012 Trees in relation to design, demolition and construction – Recommendations; British Standard BS3998:2010 Tree Work. It is essential to the successful implementation of the principles set out in this document that effective supervision and enforcement are put in place from the outset.

3.2 Phase 1 - Undertake Arboricultural Works

Remove the Ash T3.

Tree work requires skilled operators to perform pruning tasks in order to maintain the health and safe useful life expectancy of the trees, it is strongly recommended that construction staff DO NOT carry out any tree works.

Additional to this, a legal Duty of Care requires that all works specified should be carried out by qualified arboricultural contractors who have been competency tested to determine their suitability for such works in line with Health and Safety Executive guidelines. All works should be carried out in accordance with British Standard BS3998:2010 Recommendations for Tree Work.

Particular care needs to be addressed in dealing with legally protected species such as nesting birds and roosting bats which are protected under the Wildlife and Countryside Act 1981 (as amended) from intentional harm and killing and applies to roosting and hibernating bats and active bird nests. The protection of bird nests applies between mid-February to August inclusive.

3.3 Phase 2 - Tree Protection Fencing

The Tree Protection Plan can be found at Appendix 1.

The fencing shall remain in place throughout construction and be removed only on completion.

The default specification as per figure 2 of BS 5837:2012 will be used (see Appendix 2) in order to minimise the risk of damage to roots.

Within the fenced zone, no materials or chemicals should be stored at any time, no fires should be lit, no pedestrian or vehicle traffic, and level changes within these areas should be kept to an absolute minimum. Every effort should be taken to protect a maximum possible area of the root system.

It is not envisaged that the storage of materials during the construction Phase will be an issue due to the size of the site.

Clear notices are to be fixed to the outside of the fencing with words such as

'TREE PROTECTION AREA – NO ACCESS OR WORKING WITHIN THIS AREA'.

See Appendix 3. These notices shall be A3 in size, laminated and fixed to the fencing using suitable aids such as tie wires.

The site agent, all contractors and other relevant personnel are to be informed of the role of the Tree Protection Fencing and their importance. A copy of the Tree Protection Plan will be displayed on site at all times during construction.

It is recommended that a pre-commencement meeting be arranged with the contractors who may be operating the machinery to address/overcome any concerns about close by branches and to organize further mitigating pruning

It is recommended that a Structural Engineer assesses the potential of future subsidence/heave in terms of footings, in line with NHBC Chapter 4.

[redacted]

[redacted] **– Director, East Midlands Tree Surveys LTD.**

Tech Cert (Arbor A), NDF For

15/11/24

Appendix 1. Arb Impact Assessment/tree protection measures

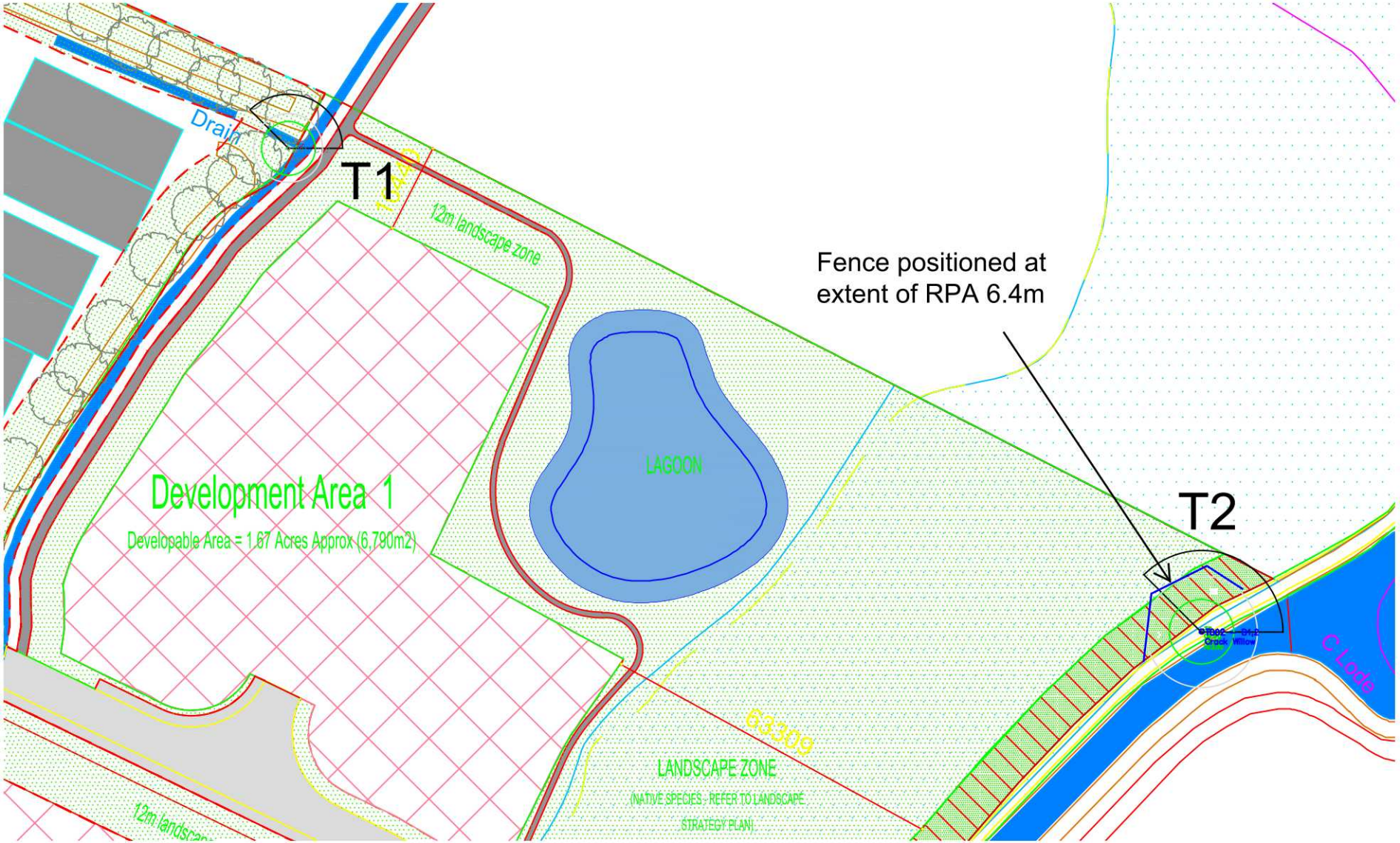

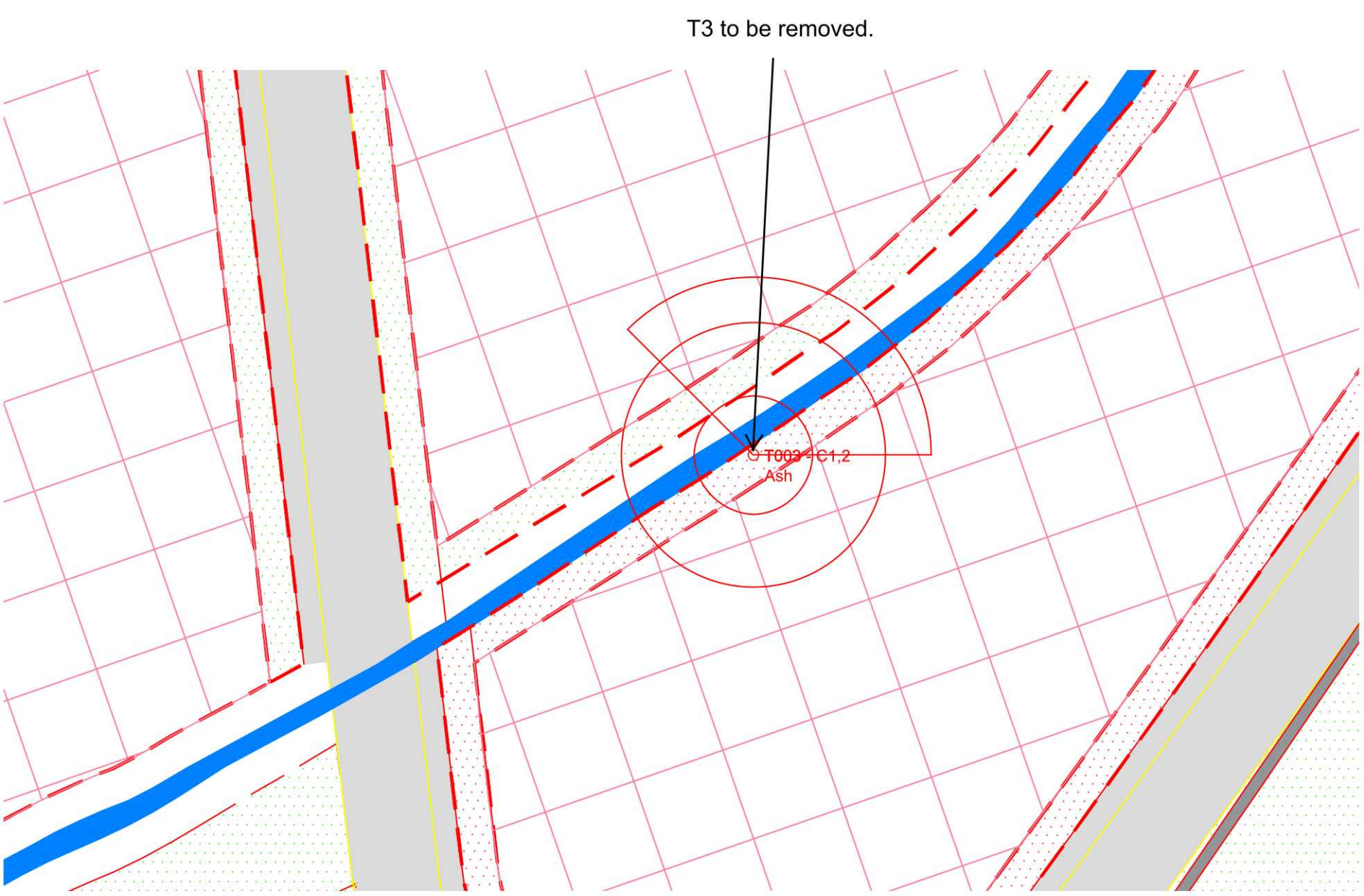
T3 to be removed.
T003 - C1,2
Ash

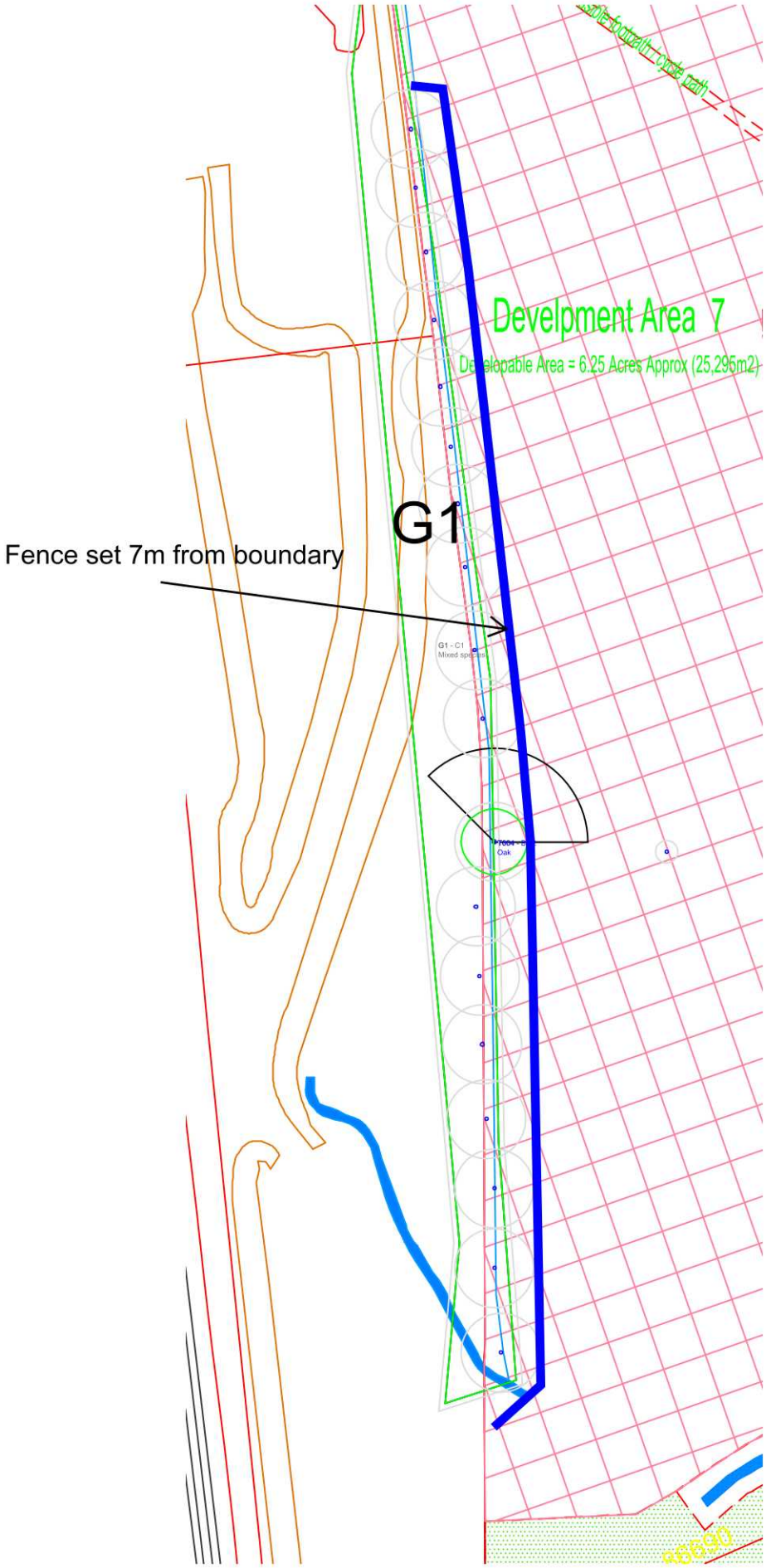
Develpment Area 7
Developable Area = 6.25 Acres Approx (25,295m2)
G1
Fence set 7m from boundary
G1 - C1
Oak

Appendix 2. Fence specification.

Figure 2 Default specification for protective barrier

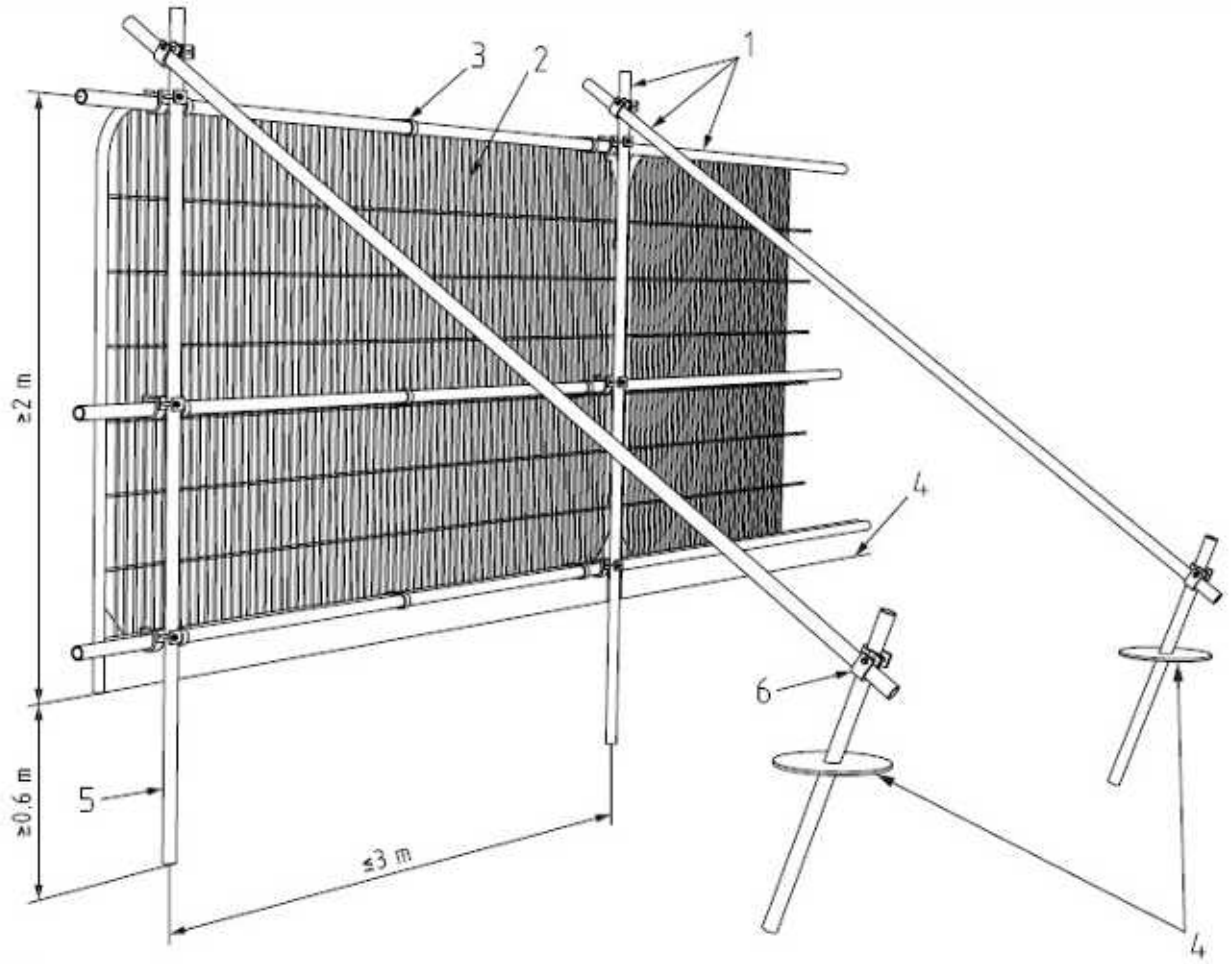

Key

1 Standard scaffold poles
2 Heavy gauge 2 m tall galvanized tube and welded mesh infill panels
3 Panels secured to uprights and cross-members with wire ties
4 Ground level
5 Uprights driven into the ground until secure (minimum depth 0.6 m)
6 Standard scaffold clamps

Appendix 3. Signs.

