ARBORICULTURAL CONSULTANTS

ARBORICULTURAL ASSESSMENT

&

METHOD STATEMENT

AT

22 BRIDGE PLACE

GODMANCHESTER

PREPARED FOR

Mr L KELLY

JULY 2018

SUMMARY

The purpose of this report is to provide both management recommendations and protection measures for trees at 22 Bridge Place, Godmanchester.

The property owner plans to refurbish the Grade II listed building that is currently in a state of disrepair and has suffered significant subsidence damage over a period. A number of trees are potentially implicated with regard to both their proximity and water demand as published in the Kew Root Survey (Cutler & Richardson 1989) and Tree Root Damage To Buildings (Biddle 1998). In addition, the owner, Mr L Kelly, wishes to carry out some works adjacent to a mature Sycamore tree and the Local Authority has expressed concerns regarding the potential damage to the root system of any excavations/ground disturbance.

The proposed development for the construction of a gravelled path over existing ground level and repair/replacement of a picket fence are unlikely to have any impact on the tree in question and the method required is outlined in this report.

Mr Kelly also wishes to remove some trees that may be contributing to the ground movement and replace with trees of lower water demand, whilst managing the crown size of the mature Sycamore to reduce water uptake.

This report includes guidance on tree protection measures and tree management, and providing these are adhered to, there will be no adverse impact on the long-term potential of the tree.

1. Introduction

1.1. Instructions

1.1.1. We are instructed by Mr L Kelly to inspect and report on a mature tree growing on land adjacent to 22 Bridge Place, Godmanchester. We are to report on the tree, it's current condition, amenity value and make recommendations for management. Mr Kelly is proposing minor ground works adjacent to the tree and we are to advise on tree protection measures.

1.2. Drawings and Documents

1.2.1. We confirm sight of the following documents and drawings prior to the commencement of this report:

- Existing and Proposed site plans by Plans to Expand Architects.
- Previous Tree Survey/report associated with a previous planning application.
- Soil survey results.

2. Report on site visit

2.1. General

2.1.1. The site was inspected on 12th July 2018 by G. Causey of Arboricultural Solutions LLP. All arboricultural data contained in this report was recorded at that time. Weather conditions were sunny, hot with good visibility.

2.2. Background

2.2.1. Mr Lar is the owner of 22 Bridge Place and is planning to refurbish the building. There has been significant damage to the property from subsidence and this may be in part due to the influences of nearby trees. The damage is extensive and is shown in photographs 1, 2 & 3 below:



Photo 1: Front elevation





Photos 2 & 3: Front flank window and rear flank wall

2.2.2. Mr Kelly has requested a report to recommend management of the mature sycamore adjacent to the site (see photo 4 below) to reduce its influence on soil moisture levels around the property. The tree is currently in the ownership of Huntingdon District Council who were reportedly going to remove the tree. Mr Kelly is due to take ownership of some additional land including the tree and is keen to retain the tree for its landscape value.

2.2.3. There are other trees on site that may be implicated in the damage to the property and Mr Kelly is seeking to remove those trees and replace with more suitable species.

2.2.4. There are to be some minor changes to surface treatment around the tree and the Council is seeking assurances that the tree will not be damaged by any proposed works.



Photo 4: Mature sycamore outside the existing curtilage of the property.

3. Tree inspection and methodology

3.1. Inspection

3.1.1. Trees likely to be affected by any developments were identified and inspected from ground level only and were not climbed. No invasive examination technique (such as increment boring, or internal decay detection) was carried out. As the inspection was visual only, no guarantee, either expressed or implied, of the internal condition of the wood of these trees can be given.

3.2. Marking

3.2.1. The provided site plan was converted for use in Arbortrail tree data collection software. Crown measurements and distances were taken using a laser rangefinder (Leica Disto D510).

3.2.2. Each reference number on the plan refers to a survey sheet entry completed on site to show the following data:

- Sequential tree reference number (recorded on tree survey plan)
- Species - Common name followed by the Latin name for the first entry of each different species
- Height in metres
- Trunk diameter in millimetres, measured in accordance with Annex C of BS 5837:2012
- Crown radius measured at the four cardinal points – where only one measurement is given, the crown is symmetrical
- First significant branch height and direction of growth
- Crown clearance above ground level
- Life stage (young, semi-mature, early mature, mature, over-mature, veteran)
- General observations, particularly of structural and/or physiological condition, and/or preliminary management recommendations
- Estimated remaining contribution in years (less than 10, 10+, 20+, more than 40)
- Category U or A to C grading, to be recorded on the tree survey plan

3.2.3. Survey sheet entries are shown at Appendix A of this report.

3.3. Tree categorisation

3.3.1. Trees vary in, size, age, and landscape importance. All trees were categorised in accordance with the British Standard Trees in relation to design, demolition and construction - recommendations BS 5837: 2012. BS Categories have been entered in the tree schedule and are as follows:

U – Trees unsuitable for retention. Trees in such a condition that they cannot realistically be retained as living trees in the context of the current land use for longer than 10 years.

A - **High Category.** Trees of high quality with an estimated remaining life expectancy of at least 40 years.

B - **Moderate Category.** Trees of moderate quality with an estimated remaining life expectancy of at least 20 years.

C - **Low Category.** Trees of low quality with an estimated remaining life expectancy of at least 10 years, or young trees with a stem diameter below 150mm.

3.3.2. The site plan was edited to show the above and below-ground constraints relative to the proposed site for the mature Sycamore, and to inform the developer of the potential conflicts with the tree population (refer to Appendix C drawing TPP_22BRIDGEPLCE_1). The root protection area (RPA) have been calculated using Trees in Relation to Design, Demolition and Construction - recommendations BS 5837: 2012. The RPAs of trees implicated in the design proposal have not been adjusted in shape to take into account site topography. Whilst the presence of roads and building foundations may restrict root spread, hard surfaces such as tarmac/paved footpaths are likely to have roots present beneath them but at a reduced volume.

3.3.3. The trunk diameter circle and crown outline show the BS Category in the following colours:

Category U	**Dark red**
High Quality (A)	**Light green**
Moderate Quality (B)	**Mid-blue**
Low Quality (C)	**Grey**

3.3.3. Trees in Relation to Design, Demolition and Construction - Recommendations BS 5837: 2012 do not include arguments for or against development, or for the removal or retention of trees. Where development is likely to occur, the standard provides guidance on how to decide which trees are appropriate for retention.

4. Brief Site Description

4.1. General

4.1.1. The site is a vacant Grade II listed building on a small plot of land on Bridge Place on the west side of The Avenue (B10004) and just north of the elevated A14. The site is screened from the A17 to the south by a belt of trees and to the north there is a group of trees outside the site adjacent to the boundary wall.

4.1.2. There are two cypress trees in the garden and a line of semi-mature trees that may be part of a lapsed hedge. There is a mature sycamore tree to the southwest of the site that will come into the ownership of the property.

4.2. Statutory Tree Protection

4.2.1. The Town and Country Planning (Tree Preservation) (England) Regulations 2012 allows for trees either as groups, or individuals, or as woodlands, to be protected by Tree Preservation Orders (TPO). These have the effect of preventing the cutting down, topping, lopping, uprooting, wilful damage or wilful destruction of trees except in certain circumstances, other than with the consent of the local planning authority.

4.2.2. A Conservation Area (CA) is an area designated by the Local Planning Authority as one of "special architectural or historic interest, the character or appearance of which it is desirable to preserve or enhance". Special controls exist regarding demolition and alteration of buildings; Listed Building Consent must also be obtained for any demolition, even if the building is not itself listed. Similarly, trees are given some protection with the requirement for the local authority to be given six weeks written notice before carrying out any work on trees; this gives the authority time to decide if a TPO is necessary.

4.2.3. The site is within the Huntingdon CA and we are informed that some of the trees are covered by a TPO, however, CA status confers protection on all trees and therefore a written application is required for any tree works.

4.3. Development Proposal

4.3.1. The proposed works adjacent to the mature Sycamore include the installation of a gravelled path and replacement/repair of a wooden picket fence and no excavations are planned.

5. Tree Population

5.1. Tree schedule

5.1.1. Refer to appendix A for detailed records of individual trees and drawing Tree Protection Plan (Appendix C drawing number TCP_22BRIDGEPLCE_1) for the locations of the tree.

5.2. Tree T1 Sycamore (*Acer pseudoplatanus*)

5.2.1 A mature tree growing outside the southeast corner of the site on a raised bank adjacent to a main road and traffic lights (see photo 4 above). The trunk divides below 1.5m and there is a significant included bark junction on the north side that does not extend through to the south side of the trunk. The tree is prominent and of amenity value and provides screening to and from the property. The tree is potentially implicated in subsidence damage to the property being 5.1m from the singles storey extension and 6.5m from the southeast corner of the rear elevation of the main building.

5.3. Hedge H1 Sycamore, Silver birch (*Betula pendula*), *Cotoneaster*, Elder (*Sambucus nigra*)

5.3.1. A line of 4 Sycamore, 2 Cotoneaster, 4 Silver birch (plus 1 dead) and 1 Elder growing along the garden boundary with Bridge Place. The trees are mutually suppressed with low forks suggesting that they were managed as a hedge in the past. The trees are generally of poor form/structure (refer to photo 5 below) but provide some low-level screening into the garden.



Photo 5: Suppressed line of trees.

5.4. Group G1 Lawson cypress (*Chamaecyparis lawsoniana*), Monterey cypress (*Cupressus macrocarpa*)

5.4.1. Two trees growing in close proximity resulting in unbalanced crowns and suppression. The Monterey cypress is multi-stemmed from ground level with several included bark junctions and the Lawson cypress has been topped in the past and regrown multiple stems with included bark.

5.4.2. The Monterey cypress has extensive browning of the foliage leading to a sparse crown and this may be due to drought or Coryneum canker or a combination of the two (refer to photos 6, 7 & 8 below).



Photo 6: Monterey cypress



Photo 7: Lawson cypress

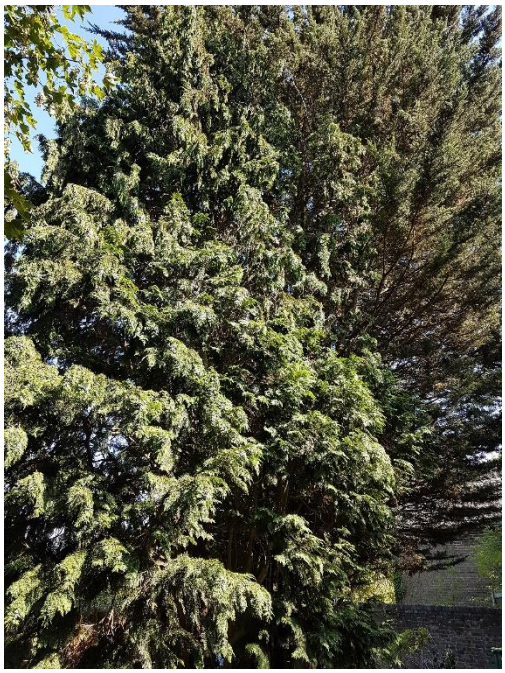

Photo 8: Two cypress with sparse crown of Monterey cypress in background.

6. Arboricultural Impact Assessment

6.1. Summary of impact

Impact	Reason	Low value (Cat C & U) trees	Moderate value (Cat B) trees	High value (Cat A) trees	Potential design & mitigation techniques
Trees to be removed	Building construction and/or surfacing	N/A	N/A	N/A	
	Arboricultural reasons	Group G1 Hedge H1	N/A	N/A	Replacement planting following completion of all renovation work and landscaping. Species to be more appropriate to a small garden and decorative.
Retained trees to be managed	Enabling works/space for development	N/A	Tree T1	N/A	Crown lift to 3m. Reduce lateral spread and height by 2m all round.
Retained trees that may be damaged	Removal of existing structures	N/A	N/A	N/A	N/A
	Removal of existing surfacing	N/A	Tree T1	N/A	Removal of any existing hard surfacing to be carried out using hand tools within the RPA
	Material storage/washing areas/welfare areas	N/A	Tree T1	N/A	All material storage/washing areas/welfare areas to be located away from the RPA unless ground protection in place. The existing hard surface can be used for storage
	Temporary access to construction areas	N/A	N/A	N/A	The development is of low intensity and heavy plant will not be used.
	Installation of new structures	N/A	N/A	N/A	N/A
	Installation of new surfacing	N/A	Tree T1	N/A	A gravel path is to be installed over the existing ground level and using pegged wooden edging.
	Excavations or ground level changes	N/A	Tree T1	N/A	No changes in levels within the RPA of the tree
	Installation of services*	N/A	N/A	N/A	N/A
	Landscaping works	N/A	Tree T1	N/A	Landscaping within the RPAs including grass to be carried out using hand tools – no mechanical cultivators to operate within the RPAs.

6.2. Arboricultural Impact Assessment

6.2.1. The development (refer to section 4.3 above and TPP_22BRIDGEPLCE_1) does not require the removal of any trees. With reference to the previous 2007 tree report by Hayden's, the British Standard has been updated (BS5837:2012) and whilst many of the recommendations remain the same, the calculation of the trunk diameter has changed and results in a larger RPA for the sycamore. However, there is an existing single-storey extension within the RPA and the foundations for this are likely to have led to some restriction of the root spread.

6.2.2. Should the existing southeast extension be demolished as part of the renovation, ground protection will be required to ensure the soil within the RPA is not compacted. The new extension should utilise the existing foundation to prevent potential root damage. If this is not possible, a trial excavation by air spade must be carried out to asses for the presence of roots. If significant roots are found (>25mm diameter) an assessment will need to be made on whether they can be severed without effecting the long-term health of the tree. If large roots are present (>100mm) then a specialised foundation will be required, and options include mini-piles with ground beam set at existing ground level or screw-piles. The foundation design must consider the proximity of a mature tree and water demand in relation to the soil type, and this is a matter for the structural engineer; Sycamore are considered to be of moderate water.

6.2.3. Mr Key is proposing a pedestrian footpath running east to west at the south of the site from the main road (adjacent to the crossing) and past the tree. The footpath will utilise a cellular confinement system e.g. Cellweb TRP (cell height 75mm) laid over a geotextile membrane and filled with clean angular stone type 4/20 with a 50mm overfill and treated wood edging pegged in place. The path is for light pedestrian use and will only cross a small percentage of the RPA. There are options available to use resin bond gravel as the final wearing surface (over the type 4/20 fill) to prevent the loose gravel migrating from the kerb edging in use; the resin bond would also remain in place where the path slopes down to the public footpath. There is also a system called Flexipave that allows for root disturbance due to its elastic nature and is used to great effect at Kew Gardens.

6.2.4. There is an existing wooden picket fence around the south of the site that is to be replaced/repaired. Where posts require replacement, the hole should be excavated by hand to ensure large roots are not present. If roots are encountered the position of the post must be moved.

6.3. Existing subsidence damage

6.3.1. With reference to section 2.2 above, the property is suffering extensive subsidence damage. A soil survey investigation in 2010 carried out a borehole to 4.1m and noted the following characteristics:

- From ground level to 1m - Firm to stiff brown silty sandy clay fill with much gravel.
  1m to 1.5m – Becoming very sandy.

- 1.5m to 2.2m – Stiff light orange brown silty very sandy clay with gravel.
- 2.2m to 2.7m – Soft to firm dark grey brown silty sandy clay.
- Below 2.7m – Firm grey brown mottled brown slightly silty slightly sandy clay with occasional fine gravel with black organic partings to 3.5m

6.3.2. A moderate inflow of water was noted at 2.7m. The foundation bears at 2.84m and is therefore in the region of the water inflow. There is no information regarding soil moisture levels or shrinkage potential although shear vane readings at 4m suggest desiccation (126-132). However, the foundations bear on sub-soil that is becoming increasingly clay like in structure whilst the upper soils are likely to be less influenced by soil moisture content due to their high sand and gravel content.

6.3.3. The borehole logs noted roots of 1mm diameter to 1.4m and fibrous roots to 2m, no root identification was carried out.

6.4. Potential influence of trees

6.4.1. **Sycamore** (tree 1 and individuals within H1) are recognised by a number of authorities to be of moderate water demand and deep rooting on clay soils with fast growth in good conditions. Maples generally tolerate heavy pruning and crown reduction.

6.4.2. Cutler & Richardson 1989 note that the maximum tree to damage distance involving *Acer* species was 20m, and in 90% of reported cases the tree was closer than 12m. It is noted that 50% of cases of damage occurred within 6m.

6.4.3. Published data indicates that at a distance of 6.5m from the building (southeast corner) and 2m (northwest corner) these trees are within the zone of influence for the roots to potentially have a detrimental effect on the foundations due to the extraction of water from the soil.

6.4.4. **Cypress** are recognised by a number of authorities to be of high water demand and moderately deep rooting on clay soils with medium to fast growth in good conditions.

6.4.5. Cutler & Richardson 1989 note that the maximum tree to damage distance involving Cypress sp was 20m, and in 90% of reported cases the tree was closer than 5m. It is noted that 50% of cases of damage occurred within 2.5m.

6.4.6. Published data indicates that at a distance of 8m from the building these trees are within the zone of influence for the roots to potentially have a detrimental effect on the foundations due to the extraction of water from the soil, however, the trees are likely to be on the periphery and it is unlikely that they are making a significant contribution to the damage.

6.5 Tree management

6.5.1. Where trees or shrubs have been implicated in, or are suspected to have contributed to, or have the potential to cause foundation damage, there are two alternatives open to the tree owner: either removal of the plant to prevent further water demand, or management of the crown to reduce water demand (by restricting leaf area available for transpirational water loss to the atmosphere.)

6.5.2 **Felling:** In considering this option, the age of the trees vis-à-vis the damaged structure must be assessed. Removal of a tree whose root system was occupying land prior to construction of a building may, if there is deep-seated and persistent desiccation, result in a re-wetting of the underlying soil to a volume greater than it held at the time of construction. This is known as 'soil heave' and can seriously damage foundations.

6.5.3 **Crown Management:** Crown management aimed at reducing a tree's water demand may be considered where building movements are mainly seasonal - indicating that the soil moisture deficit is not persistent, or where the soil moisture deficit is slight and likely to be rectified by water inputs (such as rainfall) over a comparatively short period of time. However, research shows that pruning does not permanently reduce soil water uptake. Many trees are able to quickly regenerate new leaves, and leaves remaining following pruning can increase their rate of transpiration. In some cases, water uptake can recover to pre-pruning levels within weeks. Only a regular pruning regime, carried out at short intervals, and over an extended period of time, can significantly reduce the long-term water uptake of trees.

6.5.4. The following criteria are also useful in assessing the potential efficacy of this type of management:

- That building foundation depth is sufficiently deep to cope with the decreased water demand resultant on pruning.
- That the foundations are close to the existing outer sphere of root influence.
- That the amenity value of the tree is considered adequate following pruning.
- That the tree is amenable to such treatment.

6.5.5. In this instance, the size of the trees and shrubs on site indicate that they are younger than the property. Any risk of ground recovery must be a matter for the expertise of a structural engineer; however, from observations and reading of available information we feel that the danger of structural damage or heave consequent on soil recovery should not be a significant one, and that trees and other vegetation could therefore be removed if necessary.

6.6. Conclusions

6.6.1. This property stands on an area which best information shows is likely to be underlain by soils of medium shrinkage potential (at depth). Mr Kelly has recently installed supports to the lintel over the north flank wall due to recently observed movement. This area is adjacent to the Sycamore in H1, other damage appears historical.

6.6.2. With reference to section 6.4 above, several trees are potentially within influencing distance of the property.

6.7. Recommendations

6.7.1. With reference to section 4, 5 and 6 above, we recommend the following works are carried out irrespective of the planning application:

- Tree 1 Reduce height and lateral spread by 2m and lift crown to 3m all round. After 3 years prune back to those pruning points and repeat on a three-year cycle dependant on growth rates.
- Hedge H1 Fell to ground level.
- Group G1 Fell to ground level
- Carry out replacement planting

NB: Mr Kelly has been informed that due to the proximity of tree T1 to the property, the pruning is not guaranteed to prevent further movements due to the regeneration of new growth (refer to section 6.5.3 above) and that further action may be required if movement continues.

7. Development

7.1. Threats to trees during development

7.1.1. These may be listed, in general terms as:

- Compaction of ground
- Covering rooting areas with impervious surfaces
- Excavations for foundations
- Excavation for service runs
- Alterations in ground level
- Access and movement of machinery
- Need for temporary site storage
- Crown damage by passage of high-sided vehicles

7.1.2. British Standard 5837 (1991) 'Trees in relation to construction' provided useful guidance for the assessment and formulation of measures for the mitigation of such threats. Using the experience gained from this Standard, it was revised and upgraded to 'Recommendation' status as British Standard 5837 'Trees in Relation to Construction' (2005). This British Standard was withdrawn on 30th April 2012 and replaced with Trees in Relation to Design, Demolition and Construction - Recommendations BS 5837: 2012. To assist in the prediction of the likely impact of development on retained trees, a model is used. This model is based on the age, vitality and size of individual specimens.

7.1.3. The British Standard relies heavily on the creation of a protected zone (RPA) around each tree. This area should be protected from disturbance "to avoid unacceptable damage

to the tree as a result of severance or asphyxiation of the root system." The recommended minimum area (m²) for each tree to avoid potentially harmful disturbance have been calculated for all the trees surveyed and entered into the tree schedule (appendix A).

7.1.4. BS 5837: (2012) acknowledges that the shape of the tree root system may be affected by several factors and that the shape of the RPA should reflect this. Any deviation in the RPA from the original circular plot should take account of the following factors whilst still providing adequate protection for the root system:

a) the morphology and disposition of the roots, when influenced by past or present existing site conditions (e.g. the presence of roads, structures and underground apparatus);

b) topography and drainage;

c) likely tolerance of the tree to root disturbance or damage based on factors such as species, age, condition and past management.

7.2. Root Damage

7.2.1. Trees that are growing satisfactorily have achieved equilibrium with their surroundings. Any construction work that affects this equilibrium could be detrimental to health, future growth and the safety of the tree.

7.2.2. The part of the tree most susceptible to damage is the root system, which, because it is not immediately visible, is frequently ignored. Damage or death of the root system will affect the health, growth, life expectancy and safety of the rest of the tree. The effects of such damage may only become evident several years later.

7.2.3. The majority of a tree's root system is generally considered to be in the top 600mm of the soil, extending radially in any direction for distances frequently in excess of the tree's height. However, roots are adventitious and if conditions suitable for root development exist to a greater depth, the roots may extend to depths of three metres or more. Works within the root spread may damage the root system.

7.2.4. Close to the trunk are the main structural roots that develop in response to the tree's need for structural stability. Beyond these major roots, the root system rapidly subdivides into smaller diameter roots; off this main system a mass of fine roots develops.

7.2.5. Tree root systems can be damaged in a number of ways during construction works. Root severance. Severing of a root will destroy all parts of the root beyond that point. Even roots less than 10mm diameter may be serving a mass of fine roots over a large area. The larger the root severed, the greater the impact on the tree.

- Damage to root bark. The bark protects the root and is essential for further root growth; it is loosely attached and easily damaged. If damage extends around the whole circumference, the root beyond that point will be killed.

- Compaction of the soil. Compaction of the ground reduces the space between soil particles, particularly in clay soils. A single passage of heavy equipment or the storage of materials can cause significant damage. Compaction can restrict or even prevent gaseous diffusion through the soil and thereby asphyxiate the roots. The roots must have oxygen for survival, growth and effective functioning.
- Alterations in ground levels. Lowering the level will strip out the mass of roots near to the surface. Raising the ground levels will have the same effect as compaction.

- Covering the rooting area with impervious surfaces. This prevents natural diffusion of gases between the soil and the atmosphere and can lead to oxygen depletion in the soil.

- Direct toxicity of some materials. For instance, petrol or diesel spillage or lime in cement can kill underlying roots.

- Wounding. Minor wounds to root bark can allow pathogens into the tree root system that can lead to a further impairment of water absorption. The general debilitation of trees due to root severance can make them more susceptible to invasion by some decay fungi such as Armillaria spp.

- Damage to the fine roots by severance of a main root, or by compaction, or by alteration of levels, will prevent the fine roots absorbing the water and nutrients essential for tree growth. The effects of damage from different causes will be cumulative.

7.2.6. The effects of tree root damage may not be immediately apparent. If the root system is capable of rapid regeneration, the tree may recover without noticeable ill effects, though usually symptoms take several years to develop. The range of symptoms varies from minor branch dieback, to deterioration and ultimate tree death depending on the severity of the damage and the ability of the roots to regenerate.

7.2.7. The default position should be that structures are **located outside the RPAs of trees that are to be retained**. The cumulative effects of incursions into the RPA e.g. from excavations for utility apparatus are damaging and should be avoided. Where there is evidence that a tree has been previously subjected to damage by construction activity this should be taken into account when considering the acceptability of further activity within the RPA.

8. Arboricultural Method Statement

8.1. Phase 1: Undertake Approved Tree Works.

8.1.1. All tree works should be undertaken prior to any site works commencing. Motorised vehicles will be restricted to areas of existing compacted/hard surfaces, or where ground protection is in place, and should not be taken onto un-surfaced areas within the root protection areas as shown on drawing TPP_22BRIDEGPLCE_1. Refer to Table 8.2 below for tree works.

8.2 Tree Works

Tree No.	Recommended Works
1	Crown lift all round to 3m. reduce height and lateral spread by 2m. All final cuts back to live growth. Tree to be crown reduced on a three-year cycle.
H1	Remove line of trees and grind/poison stumps
G1	Remove two cypress and grind out stumps

NB: Plant and machinery must not enter the RPAs of retained trees unless ground protection is in place and the works supervised. A written application to the Council will be required to obtain consent for the tree works. Should the application receive full planning approval the above works can be carried out without a formal application.

8.3. Phase 2: Tree protection

8.3.1. All materials storage and mixing will be confined to areas outside the RPAs of the trees. Where mixing of materials is undertaken close to the RPAs, this should be on an impervious surface with no run-off to prevent chemical contamination of the RPA.

8.3.2. The RPA of tree T1 must be protected by fencing to prevent compaction of the soil and materials being stored against the trunk. It is recommended that protective fencing is installed as shown in drawing TPP_22BRIDEGPLCE_1. Details on tree protection are given in Appendix B sections 1.2 & 1.3 & figs 1 & 2 for reference.

8.4. Excavations in RPAs

8.4.1. No excavations are planned within the RPAs of retained trees/hedges. Should a new foundation be required for the southeast single-storey extension a trial excavation by air spade will be carried out to assess the roots present. The results of this investigation will determine the type of foundation and may include mini-piles or screw piles if significant roots are found.

8.5. Changes of Surface

8.5.1. The installation of a small pedestrian footpath across the RPA of tree T1 will be carried out using a cellular confinement system set at existing ground level (refer to Appendix B section 1.7. & 1.8.) and section 6.2.3. above.

8.6. Installation of Services

8.6.1. All new services should be kept outside the RPAs of trees. However, where new services must be installed in RPAs, great care must be taken to minimise any disturbance. Trenchless installation should be the preferred option but if that is not feasible, any excavation must be carried out by hand according to the guidelines in Appendix B section 1.9.

8.7 Landscaping

8.7.1. Mr Kelly plans to landscape the garden as a seating area with mixed decorative trees following removal of the existing low-quality trees. All planting must be carried out using hand tools (refer to Appendix B section 1.10.). No herbicides should be used to clear weeds as this will be taken up by the tree roots and likely lead to long-term damage.

8.8. Other tree-related site works

8.8.1. **Pre-commencement site visit:** This is a small-scale development significant tree protection measures and therefore it is not considered necessary to arrange site meetings for this aspect although the Local Planning Authority may require a written statement from an arboricultural professional that the protection measures are in place and as agreed. Any modifications to the proposed development may require that the tree report is updated.

9. General

9.1.1. Limitations of report: This report is intended to highlight to the applicant the arboricultural implications of the development proposal on the existing tree population and measures to limit the future damage to the property from the tree population.

9.1.2. Arboricultural Standards: Any tree works should be done in accordance with the British Standard Recommendations for Tree work, BS 3998 as modified by later research. Works should be undertaken by properly qualified and experienced tree contracting company as recommended by a local authority or one approved by the Arboricultural Association. A Register of Contractors is available from:

The Arboricultural Association
The Malthouse
Stroud Green
Standish
Stonehouse
Gloucestershire GL10 3DL
UKTel +44 (0) 1242 522152
Fax +44 (0) 1242 577766
Email: admin@trees.org.uk.

9.1.3. Statutory wildlife implications: Wildlife in this country is afforded protection under the Wildlife and Countryside Act 1981 as amended by the Countryside and Rights of Way Act 2000. Statutory protection is given to birds, bats and other species that inhabit trees. Tree work is governed by these statutes and advice should be sought from an ecologist before undertaking any works that may constitute an offence.

Graham M Causey B.Sc. (Hons), F. Arbor. A, R.F.S Cert Arb. LANTRA Accredited Professional Tree Inspector

APPENDIX A TREE SCHEDULE

Tree No.	Species	Height (m)	DBH (mm)	Crown radius (m)				FSB & direction	Lower crown height (m)	Life stage	General observations	Est. Rem'ing contrib'n	BS Cat	RPA as circle of radius (x)m	RPA (m^2)
				N	E	S	W								
T1	Sycamore	15	530 520 (2)	6.7	6.2	7	7	0.8(S)	0.5	M	Normal vigour Basal growth Stem divides below 1.5m Stem divides above 1.5m Included bark present in main fork Light deadwood in crown Rubbing branches in crown 5.1m from single storey outrigger 6.5m from 2 storey-section Boundary wall damaged by movement 1.6m from tree	40+	**B2**	8.9	248
G1	Lawson cypress Monterey cypress	10								M	Group of 2 trees Mutually suppressed Asymmetric crowns due to group pressure Moderate deadwood Included bark at base and within crowns Lawson cypress topped in past Possible early coryneum canker on Monterey cypress	<10	**C**		
H	Silver birch Sycamore Cotoneaster Elder	6									Possibly unmanaged hedge Trees have bowed trunks from past suppression Mutually suppressed crowns Drawn form Poor shape/form Some multi-stemmed at ground level Included bark junctions Likely implicated in building movement	10+	**C**		

KEY

Y = Young
SM = Semi-mature
EM = Early-mature
M = Mature
OM = Over-mature
V = Veteran

H = Hedge
G = Group
B = Shrubs
K = Small tree
W = Woodland

TREE QUALITY ASSESSMENT CASCADE CHART

Category and definition	Criteria (including subcategories where appropriate)		
Trees unsuitable for retention **Category U**	Those in such a condition that they cannot realistically be retained as living trees in the context of the current land use for longer than 10 years	• Trees that have a serious, irremediable, structural defect, such that their early loss is expected due to collapse, including those that will become unviable after removal of other category U trees (e.g. where, for whatever reason, the loss of companion shelter cannot be mitigated by pruning) • Trees that are dead or are showing signs of significant, immediate, and irreversible overall decline • Trees infected with pathogens of significance to the health and/or safety of other trees nearby, or very low-quality trees suppressing adjacent trees of better quality *NOTE Category U trees can have existing or potential conservation value which it might be desirable to preserve*	
Trees to be considered for retention	**1 Mainly arboricultural qualities**	**2 Mainly landscape qualities**	**3 Mainly cultural values, including conservation**
Category A Trees of high quality with an estimated remaining life expectancy of at least 40 years	Trees that are particularly good examples of their species, especially if rare or unusual; or those that are essential components of groups or formal or semi-formal arboricultural features (e.g. the dominant and/or principal trees within an avenue)	Trees, groups or woodlands of particular visual importance as arboricultural and/or landscape features	Trees, groups or woodlands of significant conservation, historical, commemorative or other value (e.g. veteran trees or wood-pasture)
Category B Trees of moderate quality with an estimated remaining life expectancy of at least 20 years	Trees that might be included in category A, but are downgraded because of impaired condition (e.g. presence of significant though remediable defects, including unsympathetic past management and storm damage), such that they are unlikely to be suitable for retention for beyond 40 years; or trees lacking the special quality necessary to merit the category A designation	Trees present in numbers, usually growing as groups or woodlands, such that they attract a higher collective rating than they might as individuals; or trees occurring as collectives but situated so as to make little visual contribution to the wider locality	Trees with material conservation or other cultural value
Category C Trees of low quality with an estimated remaining life expectancy of at least 10 years, or young trees with a stem diameter below 150 mm	Unremarkable trees of very limited merit or such impaired condition that they do not qualify in higher categories	Trees present in groups or woodlands, but without this conferring on them significantly greater collective landscape value; and/or trees offering low or only temporary/transient landscape benefits	Trees with no material conservation or other cultural value

APPENDIX B TREE PROTECTION

1.1. Pre-commencement site meeting.

1.1.1. A pre-commencement site meeting is advised prior to any works commencing on site, to agree all the approved processes with the relevant concerned parties.

1.2. Protective fencing and ground protection.

1.2.1. All trees to be retained on site should be protected by barriers and ground protection where applicable. Barriers should be in place before any materials or machinery is brought onto site. Once in place, barriers and ground protection should be considered sacrosanct and should not be altered or removed without prior recommendation by an arboriculturist and approval of the local planning authority. Barriers should be fit for excluding construction activity and appropriate to the degree and proximity of work taking place around the retained tree(s). Barriers should be maintained to ensure that they remain rigid and complete.

1.2.2. The protective fencing is to be erected prior to any site works or demolition works.

1.2.3. The barrier is to comprise of a vertical and horizontal framework (Figure 1 below), well braced to resist impacts, with vertical tubes spaced at a maximum interval of 3m. Weldmesh panels, such as Heras, should be securely fixed with wire or scaffold clamps to this framework. Weldmesh panels on rubber or concrete feet are not resistant to impact and should not be used. Care should be exercised when locating the vertical poles to avoid underground services and, in the case of the bracing poles, also to avoid contact with structural roots. If the presence of underground services precludes the use of driven poles, an alternative specification should be prepared in conjunction with the project arboriculturist that provides an equal level of protection. Such alternatives could include the attachment of the panels to a freestanding scaffold support framework.

1.2.4. Where retained trees are near the existing buildings, a higher specification hoarding will be required to prevent damage from falling rubble. In place of the weldmesh, panels solid hoarding should be used, for example, scaffold boards.

1.2.5. Where the site circumstances and associated risk of damaging incursion into the RPA do not necessitate the default level of protection, an alternative specification should be prepared by the project arboriculturist and, where relevant, agreed with the local planning authority. For example, 2 m tall welded mesh panels on rubber or concrete feet might provide an adequate level of protection from cars, vans, pedestrians and manually operated plant. In such cases, the fence panels should be joined together using a minimum of two anti-tamper couplers, installed so that they can only be removed from inside the fence. The distance between the fence couplers should be at least 1 m and should be uniform throughout the fence. The panels should be supported on the inner side by stabilizer struts, which should normally be attached to a base plate secured with ground pins (Figure 2 below). Where the fencing is to be

erected on retained hard surfacing or it is otherwise unfeasible to use ground pins, e.g. due to the presence of underground services, the stabilizer struts should be mounted on a block tray

1.2.6. It is advised that a plan be pinned up on site in highly visible areas such as in the site huts, so that all ground staff involved in the demolition and construction works have a point of reference for tree protection issues. All demolition and construction workers should be briefed on the importance of tree protection prior to works commencing. Special attention must be paid to ensure that protective fencing remains rigid and complete during all works.

1.2.7. Where it is agreed that vehicular or pedestrian access for construction purposes is necessary within the RPA, ground protection measure will be required to prevent damage to the soil structure within the RPA.

1.2.8. For pedestrian access within the RPA, the installation of ground protection in the form of a single thickness of scaffold boards over a compressible layer laid onto a geotextile, or supported by scaffold, is likely to be acceptable.

1.2.9. For wheeled or tracked vehicle, access within the RPA the ground protection should be designed by an engineer to accommodate the likely loading and may involve the use of proprietary systems or reinforced concrete slabs. The structure must use a no dig design (see methodology described in 1.7 below) to prevent root severance and must prevent localised soil compaction by distributing the load across the track width. Such a system may include the use of three-dimensional cellular confinement systems (CCS) as a component of the sub-base, to act as a load suspension layer.

1.2.10. New permanent hard surfacing should not cover more than 20% of the RPA or be wider than 3m within it; it should be constructed to be permeable to moisture and gas.

1.3. Construction exclusion zone

1.3.1. Once the construction exclusion zone (CEZ) has been protected by barriers and/or ground protection, demolition/construction can take place.

Inside the Construction Exclusion Zone (CEZ) of the protective fencing, the following prohibitions shall apply:

- No mechanical digging or scraping
- No hand digging
- No storage of plant, equipment or materials
- No vehicular or plant access
- No fire lighting
- No washing down of vehicles or machinery
- No handling, discharge or spillage of any chemical substance, including cement washings
- No action likely to cause localised waterlogging

- No change in ground levels
- No construction of a hard surface
- No earthworks

1.3.3. To inform site personnel of the purpose of the fencing, information notices shall be fixed to the fencing at 5m intervals. These notices shall be of all-weather construction and shall be in the form of the example provided at Figure 4 below and replaced as and when necessary.

1.3.4. In addition to the above, further precautions are necessary adjacent to trees outside the CEZ:

- Materials that will contaminate the soil, e.g. concrete mixing, diesel soil and vehicle washings, should not be discharged within 10 metres of the tree stem. This should take into consideration the topography of the site and slopes to avoid materials such as concrete washings running towards trees.

- Fires should not be lit in a position where their flames can extend to within 5m of foliage, branches or trunk. This will depend on the size of the fire and the wind direction.

- Notice boards, telephone cables or other services should not be attached to any part of the tree.

1.4. Avoiding damage to stems and branches

1.4.1. Site operations should be planned to ensure that wide or tall loads or plant with booms, jibs and counterweights, could operate without coming into contact with retained trees. Mechanical damage from large plant can be significant and make their safe retention impossible. Any transit or traverse of plant near trees should be conducted under the supervision of a banksman to ensure adequate clearance from trees is maintained at all times.

1.4.2. If the use of a tower crane is necessary, its location will be predetermined and agreed in writing by the Local Planning Authority, and its operation and movements supported by a detailed Method Statement.

1.5. Reporting damage to trees and protective fencing

1.5.1. In the event of any damage to trees scheduled for retention, the damage should be reported to the site agent immediately. The site agent shall report up the chain of responsibility to the project arboriculturist or in the absence of such an appointment to an appropriately qualified arboriculturist, to enable remedial measures to be carried out immediately and if possible.

1.5.2. Should protective fencing be damaged to impair its function, all work shall cease near the damage until the fence has been returned to standard.

1.6. Excavating in RPAs

1.6.1. All excavations must be carried out using hand tools (spades, forks and trowels) and taking care not to damage bark and wood of the roots. It is acceptable to use a pneumatic hammer carefully to break up any existing hard surface for removal. Specialist tools (air spade) may be suitable in certain situations to remove soil from around the roots. All soil removal must be undertaken with care to minimise the disturbance of roots beyond the immediate area of the excavation. Where a mass of flexible roots is encountered, it may be possible either to displace the roots to another location temporarily or permanently to avoid areas of excavation. Exposed roots to be removed should be cut cleanly with sharp saw or secateurs approximately 20cm back from the face of the final excavation. Roots that are exposed temporarily should be protected from drying out, direct sunlight and extremes of temperature by suitable covering. Roots greater than 2.5cm diameter should be retained where possible; roots up to 10cm diameter should only be cut in exceptional circumstances and roots greater than 10cm should only be cut after consultation with the appropriate supervising officer.

1.6.2. Working within RPAs requires a high level of care to ensure the long-term potential of the trees. Qualified supervision is vital to minimise the risk of misinterpretation. Site personnel must be properly briefed before work commences and ongoing work should be regularly inspected by an arboriculturist to confirm compliance by the contractor.

1.7. Removing Surfacing in RPAs

1.7.1. Roots are frequently found beneath or adjacent to existing surfacing or built structures and care is needed. Damage to the roots may be by direct physical damage or compaction of the soil from the weight of plant and machinery or repeated pedestrian movement. This is generally not a problem whilst surfacing is in place as the load is spread and additional protection is not required. However, once the existing surface is removed and the soil below exposed significant damage can occur to the soil structure and directly to the roots in a very short time. The following rules must be followed:

1. No vehicular activity or repeated pedestrian access into the RPAs unless on existing hard surfacing or custom designed ground protection, this must be designed for anticipated loads.
2. Regular vehicle and pedestrian access routes must be protected from compaction by temporary ground protection.
3. RPAs exposed by the works must be protected as set out in BS 5837:2012 until there is no risk of damage from construction activity

Appropriate tools for manually removing debris may include a pneumatic breaker/drill, crow bar, sledgehammer, pick, mattock, shovel, spade, trowel, fork and wheelbarrow. Secateurs and a bow saw must be available to deal with any exposed roots that have to be cut. Machines with a long reach may be used if they can work from outside RPAs or

from areas protected by ground protection designed for the loading within the RPA. Debris to be removed from RPAs manually must be moved across existing hard surfacing or temporary ground protection to prevent compaction damage. If possible, leaving below ground structures in place should be considered if their removal may cause excess root disturbance.

1.8. Installation of new Surfacing in RPAs

1.8.1. New surfacing is potentially damaging to trees as it may require changes to existing levels, result in localised soil structure damage and disrupt the exchange of water and gases in and out of the soil. Mature or older trees are more sensitive to this type of damage than younger trees. Potential adverse impacts on the trees can be minimised by limiting the extent of these changes. The most suitable surface will be porous to allow the relatively free movement of gas and water and load spreading to limit compaction damage. The actual specification is an engineering issue that must be considered in the context of the load-bearing capacity of the soil; this element requires specialised input from the appropriate professional.

1.8.2. The actual location and depth of roots is unpredictable and will only become clear once excavation starts and following the guidance in section 1.7 above. Ideally, all new surfacing in the RPAs will be no dig, but this is rarely possible on undulating surfaces. New surfacing generally requires an evenly graded sub-base which can be made up to any high points with granular, permeable fills such as crushed stone or sharp sand; this sub-base must not be compacted as in a normal installation. Some limited excavation is usually necessary to achieve this and need not be damaging to the tree if carried out with care and avoiding cutting large roots. Tree roots generally do not occupy the top 5cm of soil, so the removal of a turf layer need not cause root damage. It may be possible to dig to a greater depth with care and dependant on local conditions. On undulating surfaces, finished levels must be carefully planned and flexible enough to allow on-site adjustment if excavations reveal large roots. Roots of 2.5cm diameter and less can normally be cut without a significant impact on the tree and the minimal 5cm depth can be used. If roots larger than 2.5cm diameter are encountered and it is considered inappropriate to cut them by a suitably qualified professional, the surrounding levels must be adjusted to consider the high points by infilling with a suitable material.

1.8.3. Generally, the construction of hard surface access within the root protection area is to be that of a ‘no-dig’ design to avoid root loss due to excavation. In addition, the structure of the hard surface should be designed to avoid localised compaction, evenly distributing the carried weight over the track width and wheelbase of any vehicles that will use the access. The design will be based on a cellular confinement system as an integral component of the sub-base, to act as a load suspension layer.
1.8.4. The finished surface will be either a granular material, permeable and gas-porous finished surface (wearing course) to allow moisture infiltration and gaseous diffusion. It is essential to maintain adequate supplies of water and oxygen for trees through the soil.

Porosity is important particularly where the new hard surface covers an area of previously unmade ground, under which tree roots may have developed preferentially.

1.8.5. No-fines granular materials should be used wherever fill or a sub-base is required to help to ensure adequate gaseous diffusion. Excess water in the root protection area should be avoided, particularly on clay soils where water logging can occur. In these cases, the hard surface should slope away from the tree to avoid ponding. Provided surface water is not liable to be contaminated by salt or toxic run-off from oil or petrol, a permeable surface should be employed.

1.8.6. Washed gravel. Washed gravel retains its porosity unless excessively consolidated, and is particularly useful where changes of level occur, or an irregular shape is needed around the stem of a tree. Gravel is easily renewed or topped up. Although weeds may become established, they can be controlled by chemical or mechanical means. However, gravel is rarely suitable for use where there is vehicle or pedestrian traffic for example, in residential areas. Materials with high fines content, such as binding gravels or hogging, should not be used due to their almost impermeable texture when consolidated.

1.8.7. Paving slabs and block pavers. Paving slabs and block pavers are available with built in infiltration spaces between the slabs or blocks. These are ideal, though they should be laid dry-jointed on a sharp sand foundation to allow air and moisture to penetrate to the rooting area.

1.8.8. Graded Soil. Sufficient spoil shall be placed along the edge of the area to receive Geoweb, suitably graded away from the works in order that it may be pulled in later. This eliminates the need to transport soil over the finished surface. The spoil (E.g. Heicom sand) shall be graded into the finished structure at the end of the scheme.

1.8.9. Construction. Refer to Fig 4 for a general overview of a typical installation with porous tarmac (illustration courtesy of Geosynthetics Ltd). The depth of CellWeb will be dependent on the expected loads and should be based on the manufacturer's recommendation.

1.9. New Services

1.9.1. **Service connections:** The location of all new service routes should ideally be outside of the root protection zones of the trees to be retained to avoid damage to tree roots. All proposed service installations should be carried out in accordance with the guidelines set out in NJUG Publication No.10, and Section 11.3.5 and 11.7 of BS5837:2005. Great care should be taken to preserve and work around roots greater than 25mm in diameter, and clusters of smaller roots avoiding damage to bark. Where it is necessary to sever roots greater than 25mm in diameter, arboricultural advice must be sought. Where smaller roots must be severed, they should be cut back cleanly using secateurs or a sharp pruning saw. Where possible, services laid through protected areas need to be installed at a depth preferably not less than 750mm deep to preserve the maximum

number of roots and avoid conflicts between the tree roots and the utility service run. The trench should be kept as narrow as possible to reduce the potential amount of root severance. Backfilling of trenches should be carried out using the excavated soil, which should be worked in around roots and lightly "tamped" not compacted and preserving the original soil profile. The backfill should be left proud of surrounding levels to allow for settlement. Trenches must not be left open overnight, and arboricultural supervision should be provided during excavation of trenches through protected zones. If the trench is to remain open for any period during the day to prevent the roots from drying out, it is advised that moist Hessian sacking be wrapped around the exposed roots, and/or trench to prevent desiccation from occurring. All existing site services that are already within the root protection areas that are to be made redundant will still need to comply with the above to prevent any damage to roots within these areas.

1.10. Soft Landscaping

1.10.1. Soft landscaping includes the re-profiling of existing soil levels and covering the soil surface with new plants or an organic covering (mulch). It does not include the construction/installation of solid structures or compacted surfacing. No significant excavation or cultivation, especially by rotovators, should be carried out within the RPAs. Where new designs require levels to be increased to tie in with new structures or the removal of an existing structure has left a void below the surrounding ground level, good quality and relatively permeable top soil should be used for the fill. It should be firmed into place but not over compacted in preparation for turfing or careful shrub planting.

Figure 1: Tree Protective fencing

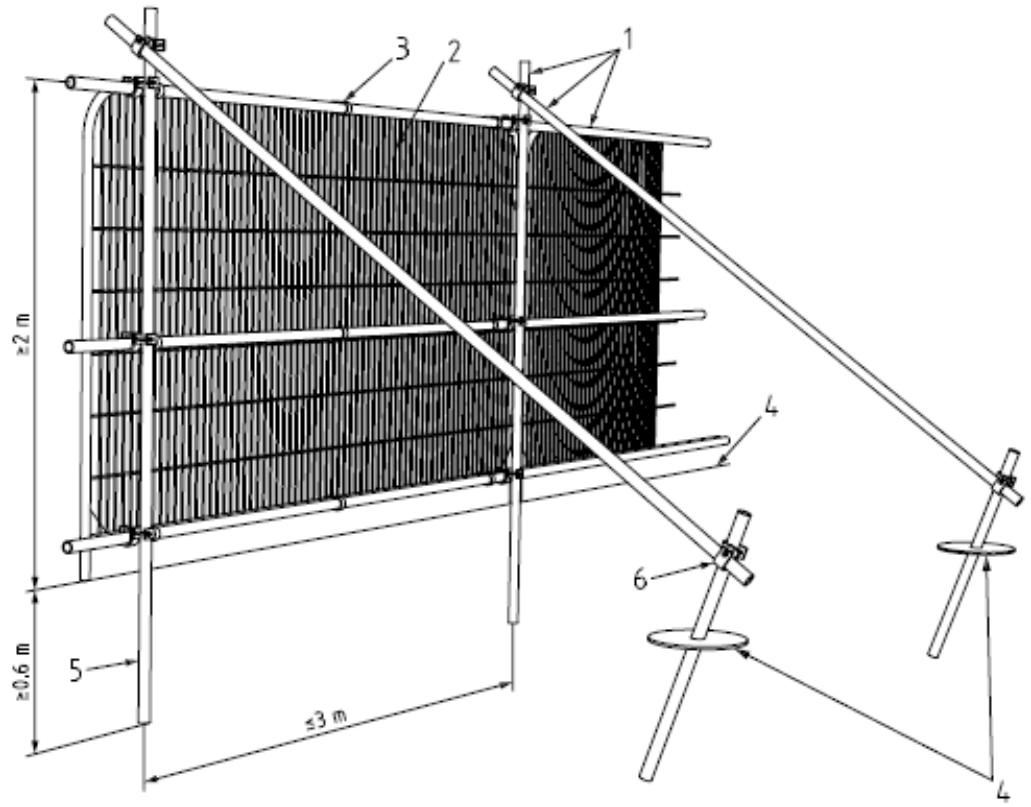

Key

1 Standard scaffold poles
2 Heavy gauge 2 m tall galvanized tube and welded mesh infill panels
3 Panels secured to uprights and cross-members with wire ties
4 Ground level
5 Uprights driven into the ground until secure (minimum depth 0.6 m)
6 Standard scaffold clamps

Figure 2: Tree Protective fencing (alternative)

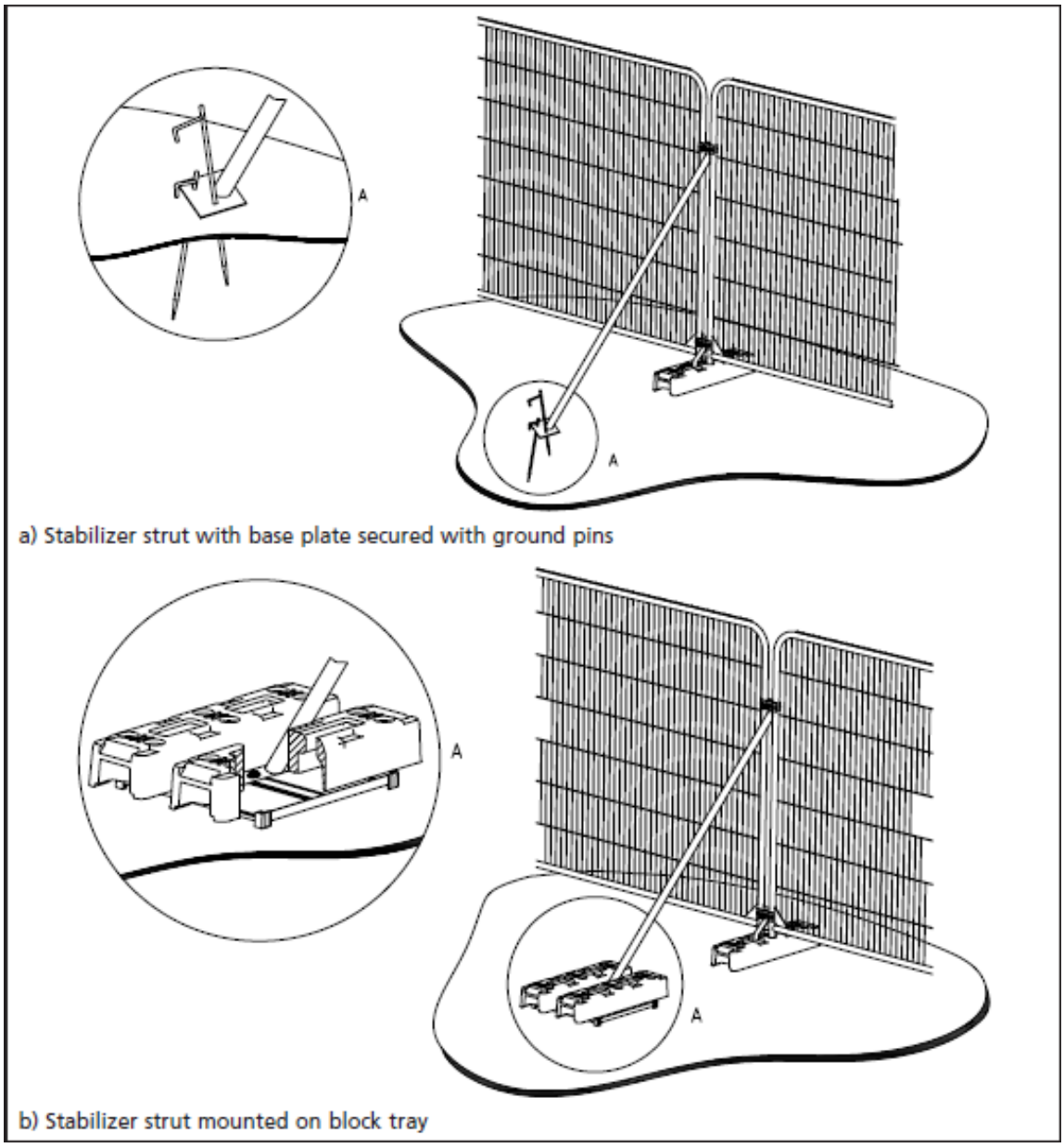

Figure 3: Example of warning notice



Figure 4: Cellular Confinement System

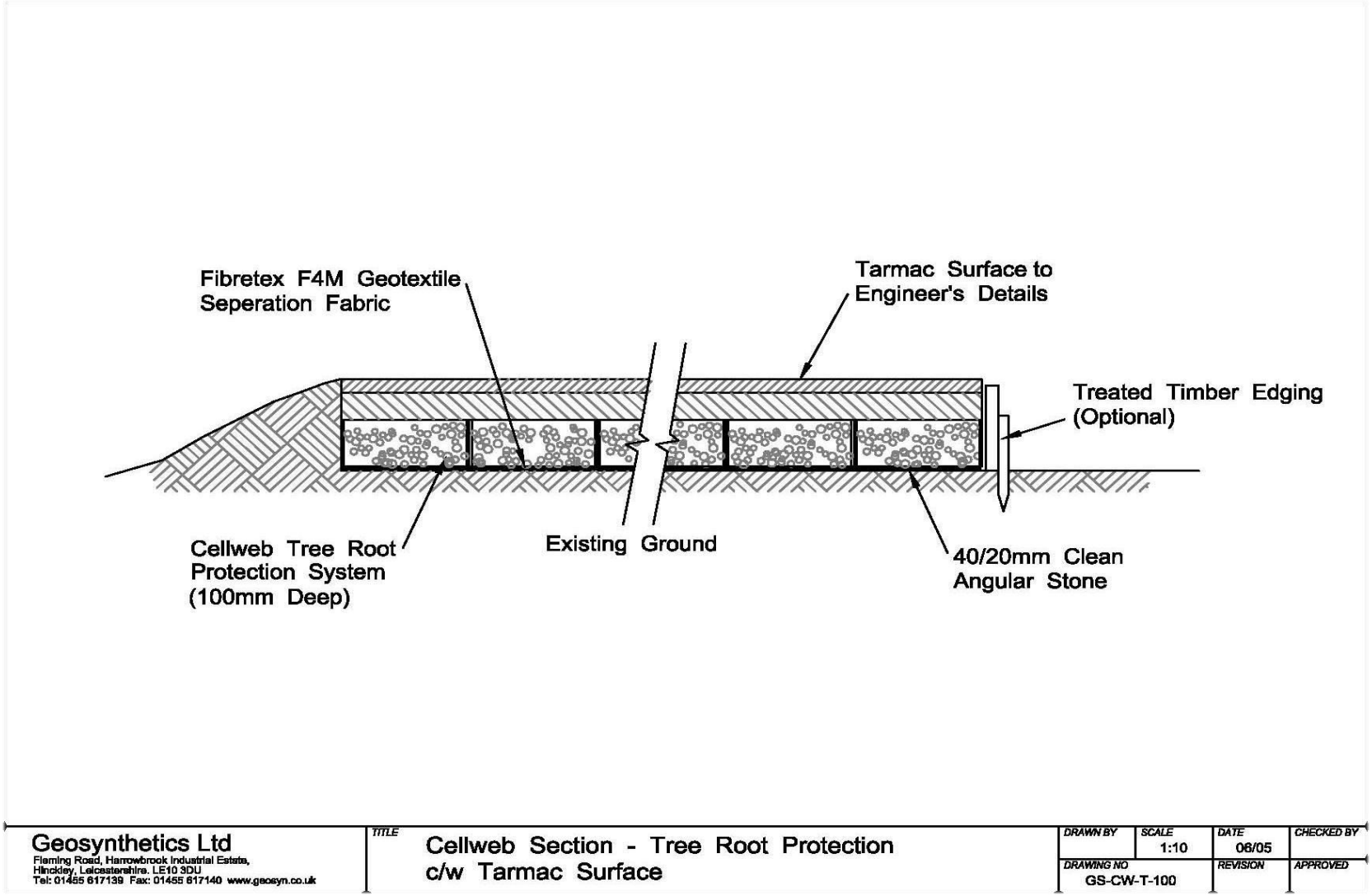

APPENDIX C TREE PROTECTION PLAN

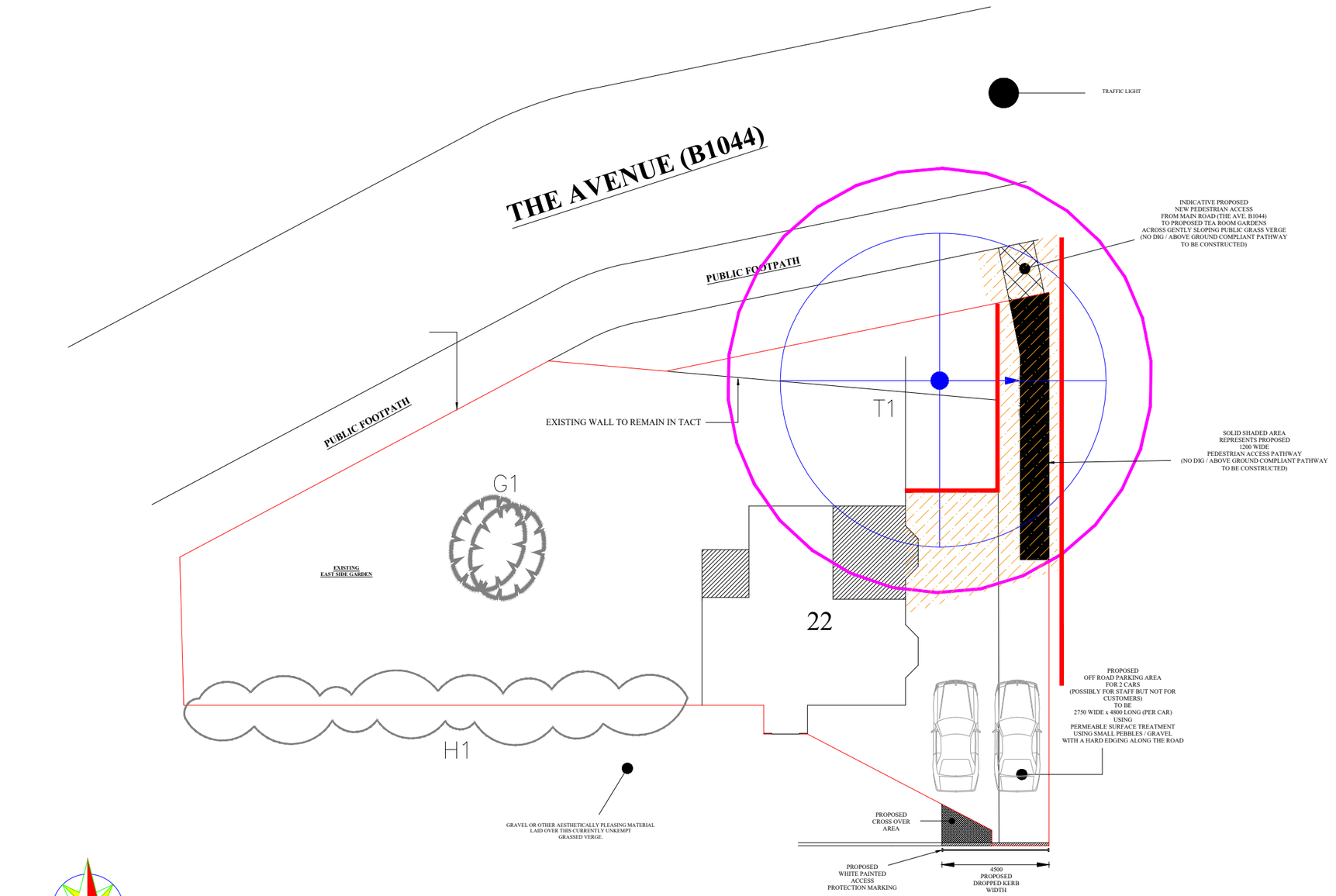

BRIDGE PLACE

ARBORICULTURAL SOLUTIONS LLP

3 WALNUT CLOSE
PETERBOROUGH, PE7 1LL

TEL: 01733 208661
EMAIL: grahamcausey@gmail.com
fionacritchley2016@gmail.com

KEY

BS CAT B

BS CAT C

ROOT PROTECTION AREA (RPA)

PROTECTIVE FENCE

HAND DIG GROUND PROTECTION &

DRAWING TITLE

TREE PROTECTION PLAN

PROPOSED SITE

PROJECT

22 BRIDGE PLACE

CLIENT

Mr L KELLY

SCALE	1:200@A3		
DATE OF ISSUE	JULY 2018		
SURVEYOR	GMC	DATE	
DRAWN BY	GMC		
DRAWING No.	TPP_22BRIDGEPLCE_1	REV	A

No.	DATE	REVISION