ARGENTA

TREE SURVEYS

ARBORICULTURAL METHOD STATEMENT
&
ARBORICULTURAL MONITORING

Site at:

Land off Tunkers Lane
Bury
Ramsey
Cambridgeshire
NGR TL 27980 83396

Job ref	Report Version	Author	Checked	Date
ATS0722	V3	IL	IL	September 2025



Land off Tunkers Lane
Bury
Ramsey
Cambridgeshire
NGR TL 27980 83396
ATS0722

Ian Lorman

Relevant Qualifications

Professional Diploma in Arboriculture (Royal Forestry Society)

National Diploma in Arboriculture

National Certificate in Horticulture (Arboriculture Module)

Professional Membership

I have been a Fellow Member of the Arboricultural Association since 2013

Membership number FE1030

Arboricultural ASSOCIATION
Fellow Member

Experience

My career started in 1991 from craft level in arboriculture, to student, and then working in closely related industries to working as an Arboricultural / Trees Officer in five different local authorities. I have been practicing arboricultural consultancy for several years.

CONTENTS

Chapter		Page
1	Arboricultural Method Statement (AMS)	1
2	Details and Instructions	2

Other documents and plans attached

Tree Constraints & Removals Plan (site as existing) 1:300 @ A0

AMS Tree Protection Plan (approved layout) 1:300 @ A0

Tree Protection Plan Inset Maps 1 to 6 (detail)

Tree Survey Schedule



1 Arboricultural Method Statement (AMS)

1.1 General provisions:

- This statement is made without prejudice to the provisions of The Construction (Design and Management) Regulations 2015 (CDM 2015).
- This statement is to be made freely available and to be familiar to all site operatives for the duration of the project.
- Any drawings referred to in this statement shall be made available to all site operatives.
- Printed drawings will require access to a scale rule which must be made available to measure dimensions off drawings. The drawings must be read in colour.
- No signs, cables, fixtures, or fittings of any other description shall be attached to any part of a tree that is to be retained as part of the scheme UNLESS it can be fixed without attachment through bark or wood. In effect this means no nails, screws, bolts, or any other invasive hardware can be used.
- If in doubt about any instructions insofar as they may affect trees, ask the site manager or arboricultural consultant.

1.1.1 Drawings referred to in this statement:

i. Tree Constraints & Removals Plan

ii. AMS Tree Protection Plan & Inset Maps 1 thru 6

2 Details and Instructions

2.1 Below: Site specific AMS

Site address	Land off Tunkers Lane, Bury, Ramsey, Cambridgeshire
Local Planning Authority (LPA)	Huntingdonshire District Council
Planning application no.	22/01946/REM – Reserved matters (layout is approved)
Decision date	28th June 2024
Appeal reference (if relevant)	N/A
Planning condition number(s)	9 & 10
Planning condition(s) wording	Condition 9: No development, demolition, clearance or preparatory operations (excluding excavation works outside of RPAs) shall commence on site in connection with the development hereby approved until an Arboricultural Method Statement has been submitted to and approved in writing by the Local Planning Authority. The development shall thereafter be undertaken in accordance with the approved Statement. Condition 10: No development, demolition, clearance or preparatory operations (excluding excavation works outside of RPAs) and the siting of site huts and WCs, shall commence on site in connection with the development hereby approved until a programme of monitoring (tree protection) has been submitted to, and approved in writing by the Local Planning Authority. Monitoring shall be undertaken in accordance with this agreed programme for the duration of construction and associated works unless the Local Planning Authority gives written approval to any variation.
Project Manager (name & contact)	Unknown
Client (name)	Burmor Construction
Planning Agent (name & contact)	Burmor Construction
Architect (name & contact)	DT Architects

Main Contractor (name)	Burmor Construction
Site Manager (name & contact)	Unknown
LPA Tree Officer (name)	Mr Neil Smith
LPA Planning Case Officer (name)	N/A
Arboricultural Consultant (site personnel to contact only with permission of client as fees require prior approval)	Ian Lorman Dip.Arb(RFS); FArborA Director Argenta Tree Surveys Ltd Email: thetreeman@live.co.uk Web: argentatreesurveys.co.uk Land: 01638781422 Mobile: 07766379251
Tree Protection Measures for this project	Temporary barrier fencing excluding RPAs where possible or necessary
Works Within Root Protection Areas (RPAs) of Trees	New hard surfaces partially in RPAs of several trees
Arboricultural monitoring visits & supervision	In accordance with condition 10: Client or site manager to liaise with arboricultural consultant prior to trigger points below to arrange inspection / sign-off using the pro-forma provided with this statement

Description
Condition 10: Arboricultural monitoring
1. Pre-commencement site meeting with principal contractor to check that all temporary tree protection measures have been installed in accordance with the approved tree protection plan (TPP) and arboricultural method statement/s (AMS)
2. During implementation, MONTHLY visits to check that tree protection measures are being observed / are still in place for the DURATION OF CONSTRUCTION. To be arranged with site manager with no more than 24 hours' notice *****PRICE PER VISIT*****
3. Pre-completion meeting / debrief with site manager BEFORE temporary tree protection measures are removed and taken away from site. Meeting to include a schedule of remediation / mitigation works if damage to trees / roots is apparent
4. ALL visits / meetings to be recorded by Argenta Tree Surveys on a pro-forma, including photographs where deemed necessary

Order of operations & monitoring trigger points	1. Felling of trees and tree groups shown with a broken outline on the Tree Constraints & Removals Plan (dated 14 May 2025) – Also listed as 'Fell' on the tree survey schedule 2. Crown lifting over site of overhanging trees numbered 1 to 19 for 3 metres headroom (secondary growth only – ends of branches). 3. Cutting back (siding-up) of tree groups numbered G9, G10 & G12 to accommodate construction (access facilitation). These groups are effectively hedgerows 4. REFER TO INSET MAPS 4 & 5 – Using tape or marker paint mark out the lines of the edges of the road, passing bays, and tarmac footpaths as accurately as possible (to provide a visual reference for erecting the tree protection fencing) 5. REFER TO INSET MAP 6 - Using tape or marker paint mark out the lines of the footpath through tree groups G5 & G6, and the short access road / substation in group G6 as accurately as possible (to provide a visual reference for erecting the tree protection fencing) 6. REFER TO INSET MAPS 1 TO 6 - Erect the temporary tree protective barrier fencing. **PRE-COMMENCEMENT SITE MEETING.** Tree fencing to be checked for correct positioning and type. 7. Delivery of plant and materials. 8. Removal of stored soil bunds alongside western boundary. REFER TO Tree protection plan approved layout dated 03/09/2025. Excavators to be restricted to east side of bunds and to pull back the soil towards themselves. NO DIGGING INTO THE GROUND BELOW. 9. Commencement of construction (except no-dig path alongside Plot 1 shown in blue)) **MONITORING**

VISITS (RANDOM ON AT LEAST A MONTHLY BASIS)

10. Construction of no-dig path section (26 metres) alongside Plot 1.

i. Remove tree protective fencing next to Plot 1 (see INSET 1)

ii. Install temporary heavy-duty track mats.

iii. Soil scrape to remove surface vegetation.

iv. Lay non-woven permeable geotextile onto ground and pin into position.

v. Install treated softwood edge board along western boundary edge of path and secure with pegs.

vi. Insert 3-D cellular confinement matrix into place to form the subbase – such as Geoweb TRP by Greenfix. The 75mm depth should be adequate for a footpath.

vii. Install treated softwood board edge along the eastern edge of the path so that the matrix is enclosed at both sides by the softwood edging.

viii. Starting at the Tunkers Lane end tip the inert granular fill (20mm washed sharp stone chips (no fines)) into the matrix and slightly overfill the cells to allow for settlement. Slightly consolidate the top

	of the stone chip fill to achieve a flat level surface. ix. Add Tarmac Dry permeable tarmac surface. Gently grade the step along the eastern side of the path edging using clean soil so there is no step off the edge of the path. **ARBORICULTURAL SUPERVISION ESSENTIAL** 11. **PRE-COMPLETION MEETING.** Just prior to completion of construction / just before soft landscaping. To check that tree protection fencing can be dismantled and removed from site. 12. Completion of construction / soft landscaping

- Below: Site monitoring pro-forma to be used

ARBORICULTURAL SITE MONITORING RECORD PRO-FORMA Site name / address:.....

INSPECTIONS	DATE	PERSONS PRESENT	OBSERVATIONS	RECOMMENDATIONS – RECTIFICATION RECTIFY DEADLINE	REINSPECT? Y/N - DATE
Pre-commencement (inc demolition) meeting with site manager to inspect tree-protective barrier fencing / temporary ground protection measures					
Unannounced inspection of all physical tree protection measures during demolition or construction					
Tree inspection following completion of construction					

Signed / date:

(Arboricultural Consultant & Site Manager / rep in agreement of action points)

Contacts

Project Manager:

Site owner / agent:

Arboricultural Consultant: Ian Lorman – Argenta Tree Surveys Ltd – 07766 379251 / info@argentatreesurveys.co.uk

Local Planning Authority:

ARGENTA
TREE SURVEYS



ARGENTA
TREE SURVEYS

www.argentatreesurveys.co.uk

Tel: 01638 781422
Mobile: 07766 379251
Email: info@argentatreesurveys.co.uk

Copyright Argenta Tree Surveys Limited
Company no: 10697882
VAT no: 335731700
Registered Company address
11 East Road
Isleham
Ely
Cambridgeshire
CB7 5SN

Signed:



Ian Lorman
Director

September 2025



ARGENTA
TREE SURVEYS

Land off Tunkers Lane, Bury, Ramsey
Tree constraints & removals

SCALE :
1 : 300 @ A0

DATE :
14/05/2025

MAP FILENAME :

N

THIS DRAWING MUST BE READ IN COLOUR

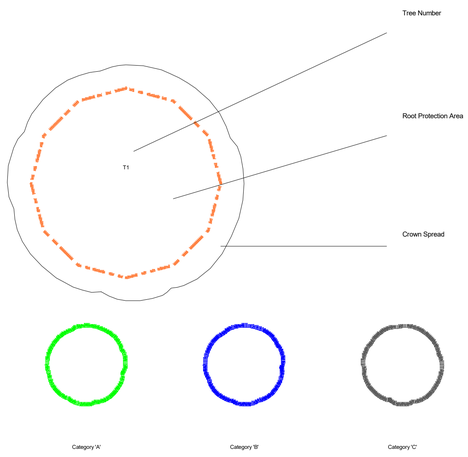

0 60m

NOTE
TREES / GROUPS SHOWN WITH A BROKEN / DASHED OUTLINE ARE PROPOSED FOR REMOVAL TO IMPLEMENT THE DEVELOPMENT

APPROVED LAYOUT UNDER
HDC REF: 22/01946/REM

DISCHARGE OF CONDITION 8
TREE PROTECTION PLAN

INSET 1

INSET 2

INSET 3

INSET 4

INSET 5

INSET 6

TUNKERS LANE

TARMAC FOOTPATH

TIPPED SOIL TO REMOVE

KEEP EXISTING HEDGE

22 1 2 3 34 4 5 6 7 39 8 9 10 11 12 13 14 15 16 17 18 19 20 21 38 37 36 30

G5 G6 G8 G9 G10 G11 35

Temporary tree-protective construction exclusion zone enclosed by robust fencing in accordance with British Standard BS5837
SEE ARBORICULTURAL METHOD STATEMENT

Crown Spread
Root Protection Area
Category 'A'
Category 'B'
Category 'C'
Category 'U'

0 60m

MINIMUM STANDARD OF TREE PROTECTIVE BARRIER FENCING TO BE USED (SUPPORT STRUTS ON TREE SIDE OF HERAS PANEL)

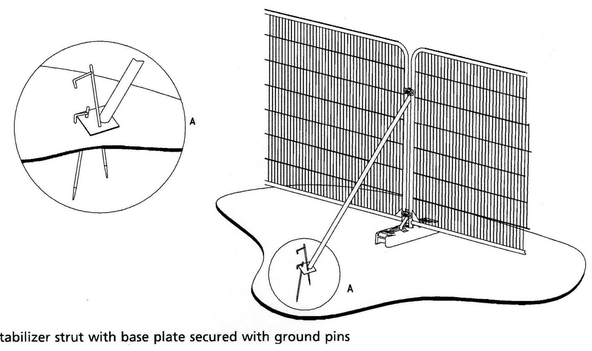

a) Stabilizer strut with base plate secured with ground pins

ARGENTA
TREE SURVEYS

Land off Tunkers Lane, Bury, Ramsey
Tree protection (approved layout)
See inset maps 1 thru 6 V2

SCALE :	DATE :
1 : 300 @ A0	03/09/2025

MAP FILENAME :

N

THIS DRAWING MUST BE READ IN COLOUR

No-dig permeable path section using porous tarmac wearing course (Tarmac Dry) (See arboricultural method statement)

Temporary tree-root-protective heavy-duty track mats

ARGENTA
TREE SURVEYS

Land off Tunkers Lane, Bury, Ramsey
Tree protection INSET 1

SCALE : 1 : 200 @ A4
DATE : 03/09/2025
MAP FILENAME :

N

THIS DRAWING MUST BE READ IN COLOUR

Crown Spread
Root Protection Area
Category 'A'
Category 'B'
Category 'C'
Category 'U'

0 12m

TUNKERS LANE

22
1
2
3
34

NO-DIG TARMAC FOOTPATH

THIS SECTION OF FENCING TO BE REMOVED IN THE FINAL PHASE TO IMPLEMENT CONSTRUCTION OF THE NO DIG FOOTPATH

5.5M
5.5M
2.5M

OTPATH

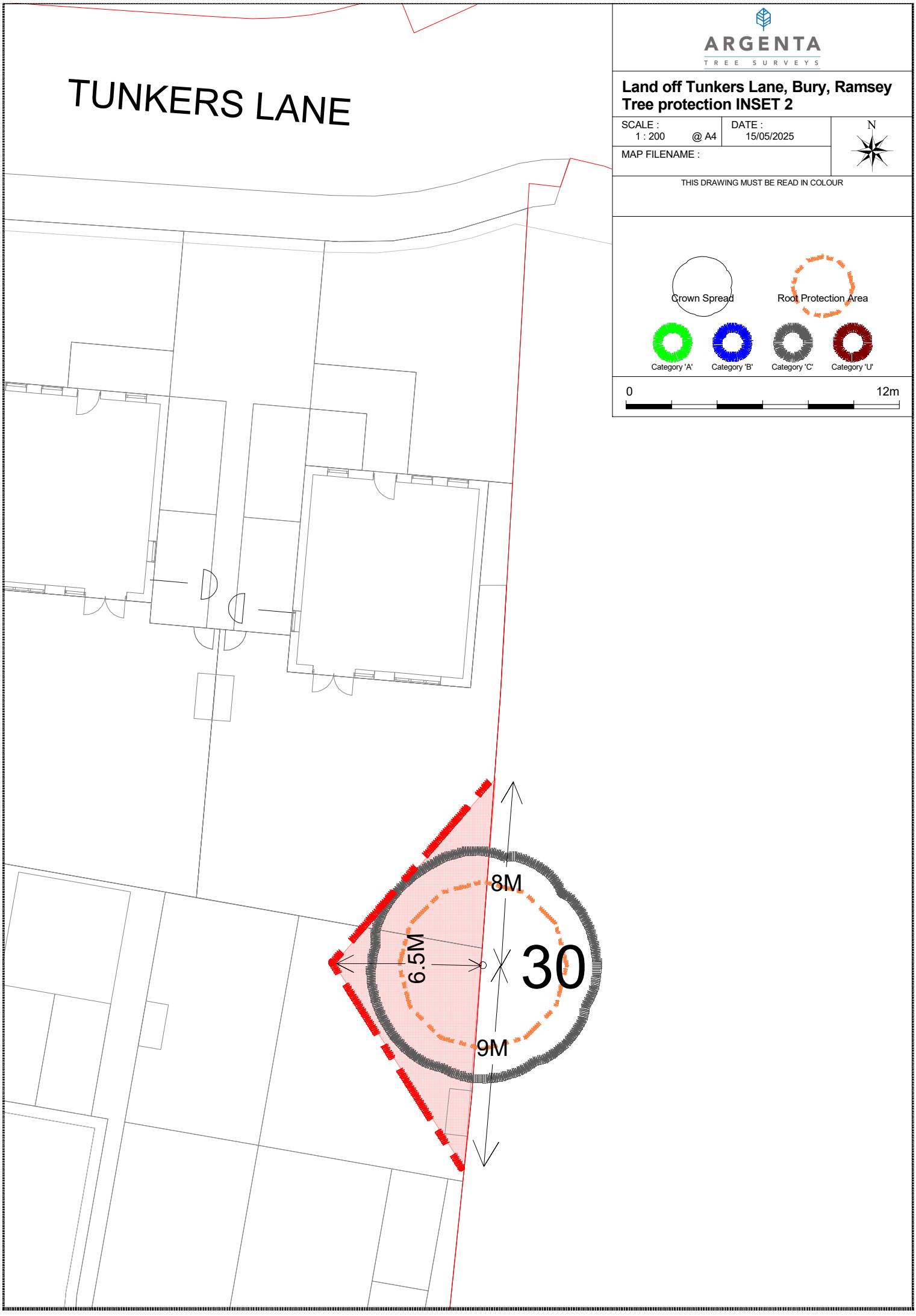
TUNKERS LANE
ARGENTA
TREE SURVEYS
Land off Tunkers Lane, Bury, Ramsey
Tree protection INSET 2
SCALE :
1 : 200 @ A4
DATE :
15/05/2025
N
MAP FILENAME :
THIS DRAWING MUST BE READ IN COLOUR
Crown Spread
Root Protection Area
Category 'A'
Category 'B'
Category 'C'
Category 'U'
0
12m
8M
6.5M
30
9M

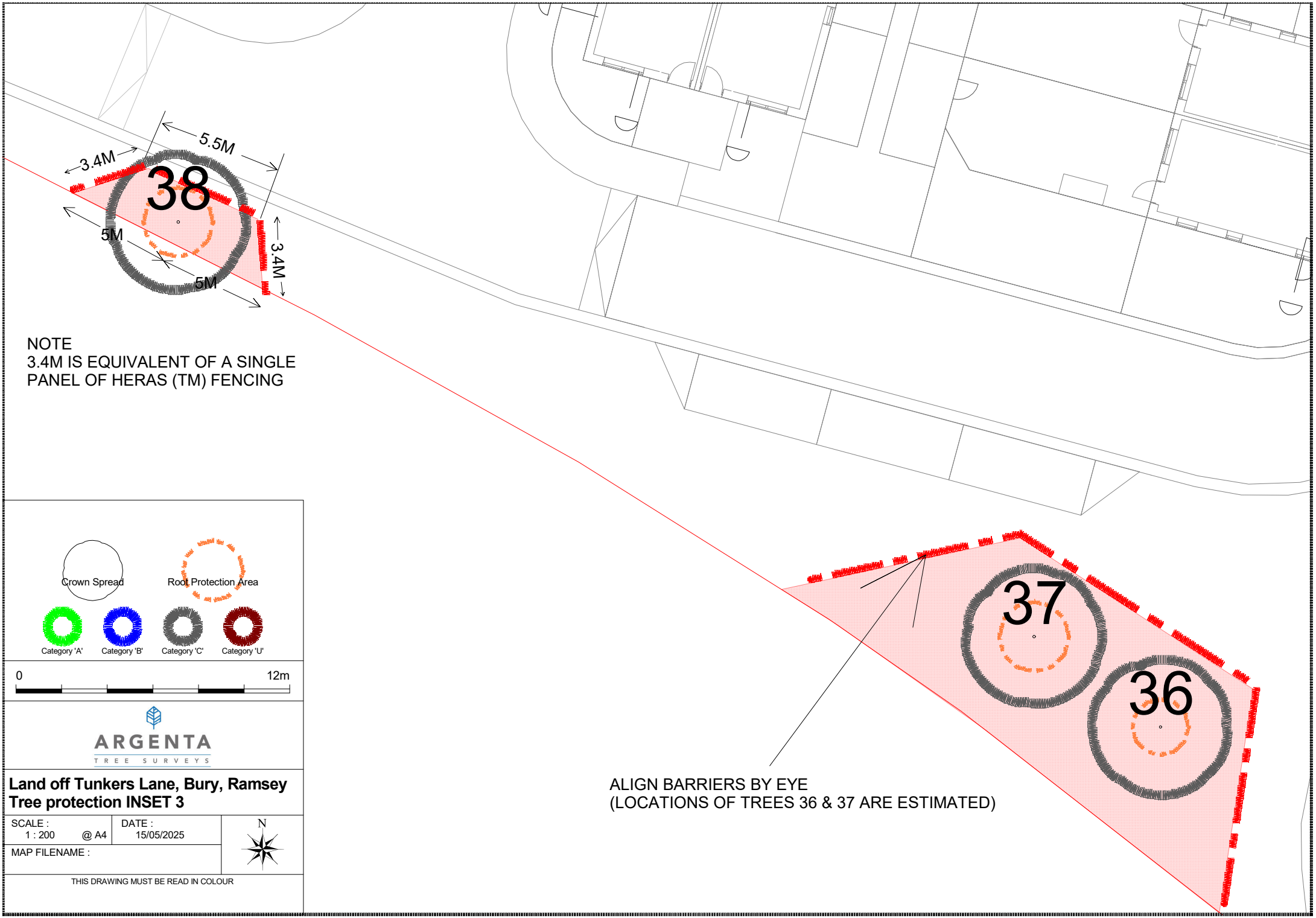

NOTE
3.4M IS EQUIVALENT OF A SINGLE PANEL OF HERAS (TM) FENCING

ALIGN BARRIERS BY EYE
(LOCATIONS OF TREES 36 & 37 ARE ESTIMATED)

Crown Spread
Root Protection Area
Category 'A'
Category 'B'
Category 'C'
Category 'U'

0 12m

ARGENTA
TREE SURVEYS

Land off Tunkers Lane, Bury, Ramsey
Tree protection INSET 3

SCALE : 1 : 200 @ A4	DATE : 15/05/2025	N
MAP FILENAME :		

THIS DRAWING MUST BE READ IN COLOUR

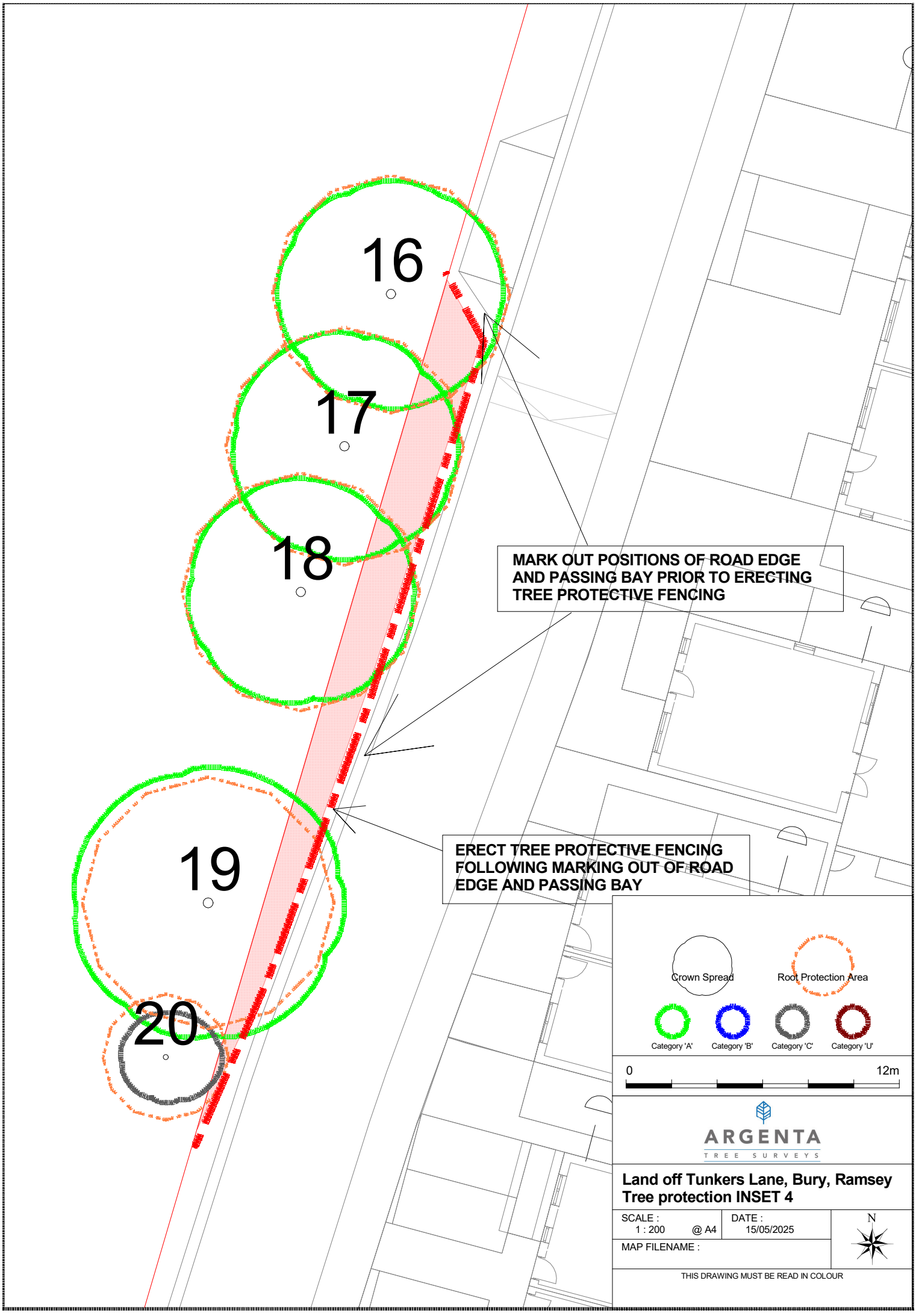
16
17
18
19
20
MARK OUT POSITIONS OF ROAD EDGE AND PASSING BAY PRIOR TO ERECTING TREE PROTECTIVE FENCING
ERECT TREE PROTECTIVE FENCING FOLLOWING MARKING OUT OF ROAD EDGE AND PASSING BAY
Crown Spread
Root Protection Area
Category 'A'
Category 'B'
Category 'C'
Category 'U'
0
12m
ARGENTA
TREE SURVEYS
Land off Tunkers Lane, Bury, Ramsey
Tree protection INSET 4
SCALE : 1 : 200 @ A4
DATE : 15/05/2025
MAP FILENAME :
N
THIS DRAWING MUST BE READ IN COLOUR

ARGENTA
TREE SURVEYS

Land off Tunkers Lane, Bury, Ramsey
Tree protection INSET 5

SCALE :	DATE :	N
1 : 500 @ A4	15/05/2025	
MAP FILENAME :		

THIS DRAWING MUST BE READ IN COLOUR

Crown Spread
Root Protection Area
Category 'A'
Category 'B'
Category 'C'
Category 'U'

0 30m

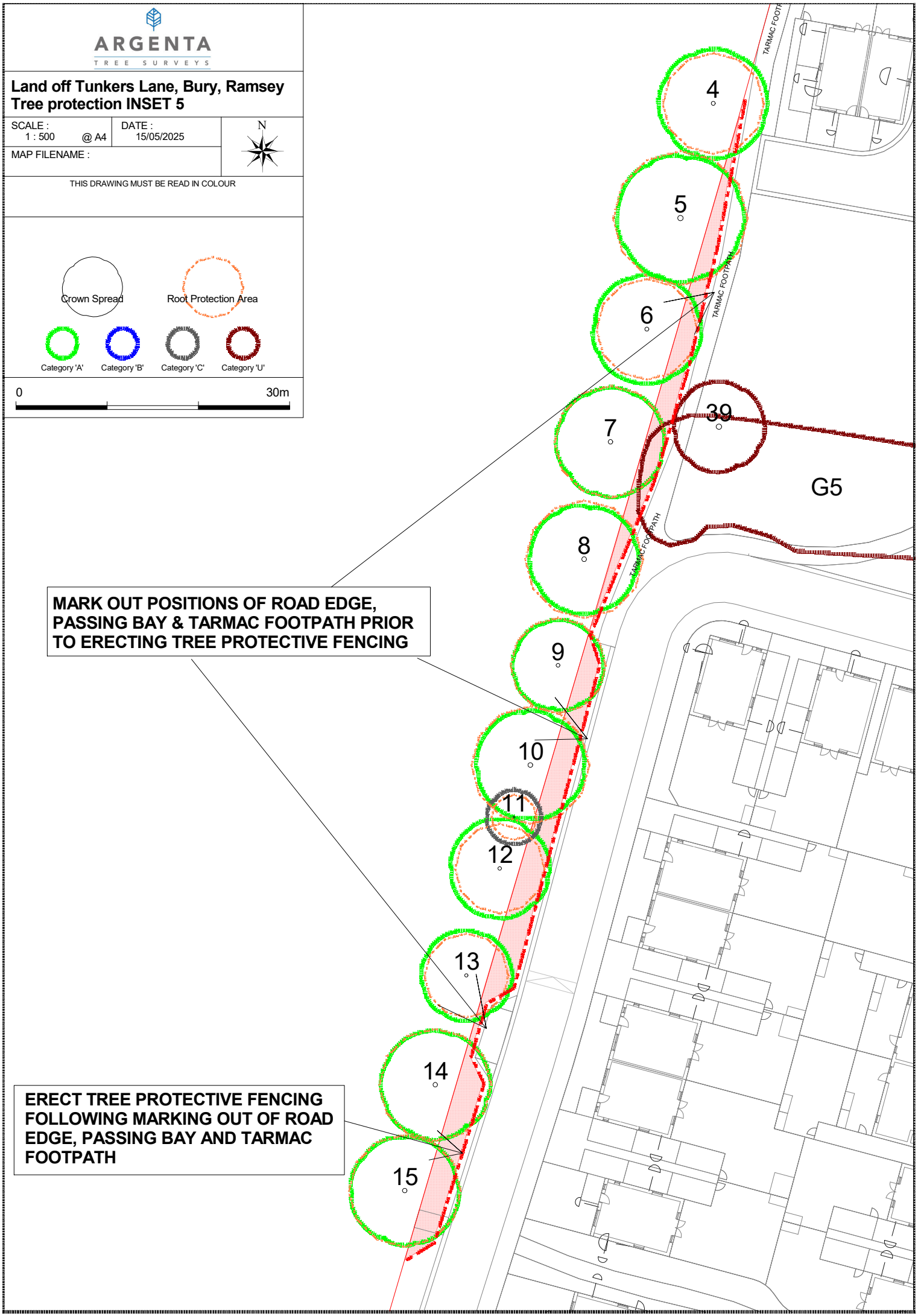

POSITIONING OF TREE PROTECTIVE FENCING FOR TREE GROUPS G5 AND G6 TO BE WORKED OUT FOLLOWING MARKING OUT OF FOOTPATH ROUTE AND ACCESS TRACK

TARMAC FOOTPATH

TARMAC FOOTPATH

TARMAC FOOTPATH

TARMAC FOOTPATH

G5

G6

6

7

39

8

9

10

11

12

13

Crown Spread

Root Protection Area

Category 'A'

Category 'B'

Category 'C'

Category 'U'

0

25m

ARGENTA

TREE SURVEYS

Land off Tunkers Lane, Bury, Ramsey
Tree protection INSET 6

SCALE : 1 : 300 @ A3

DATE : 16/07/2025

N

MAP FILENAME :

THIS DRAWING MUST BE READ IN COLOUR

LEGEND TO TREE SURVEY FORM

Tree number/Tag	Numbered tag fixed to tree or given number on plan where no tag has been used. Given number for groups (G), hedges (H) or shrubs (S). Individual trees will have no tag if located on adjoining land or inaccessible Note: Tags are only used occasionally, to draw attention to a particular tree or trees when they might otherwise be difficult to locate on the ground without a number physically attached to them
Species	Tree species - Common name or botanical name if no common name is in common use
Tree height	Height in metres where measurement is possible using a laser clinometer. Estimated where tree is inaccessible or where it is not possible to see the top and bottom of the tree simultaneously to take a measurement
Stem Dia(s)	Trunk diameter measured at 1.5 metres above ground level (on the side of the tree where the ground is highest). Where there are multiple stems, measurements are made for each stem
RPA radius	Root Protection Area radius in metres (linear) measured from centre of tree trunk. Formulae apply to multiple stemmed trees with up to 5 stems and trees with more than 5 stems. NOTE: For single stemmed trees the RPA is 12 x trunk diameter up to a maximum of 15 metres. For 'veteran' trees the RPA can be greater than 15 metres
RPA m^2	Root Protection Area in square metres. Formulae apply to multiple stemmed trees with up to 5 stems and trees with more than 5 stems. NOTE: For single stemmed trees the RPA is 12 x trunk diameter up to a maximum of 707 $metres^2$. For 'veteran' trees the RPA can be greater than 707 $metres^2$
Crown spread	Spread of tree crown (branches) in metres at each cardinal point (NESW) measured from tree trunk using a laser rangefinder. Estimated where inaccessible
1st large branch height above ground	The height in metres on the tree of the lowest major branch and its direction (where relevant)
Canopy height above ground	Headroom - The height above ground in metres of the lowest part of the tree crown / branch ends (where relevant)
Life stage	The estimated stage of life of the tree in relation to its species. e.g. A Silver Birch may be considered 'mature' at 40 years, but Oak may be considered to be in early maturity at the same chronological age.
Observations; structural / physiological condition and any preliminary recommendations	The condition of the tree in relation to the presence of any notable structural defects or ill-health and any recommendations that may be relevant to good arboricultural management or in relation to a proposed development Note: Sometimes defects in trees such as cavities and splits can be viewed as beneficial because of their ecological value, especially on 'veteran' trees
Estimated remaining contribution	An estimated range of the minimum number of years a tree may make a positive contribution before it falls into decline (senescence). This is recorded as <10 years, 10+ years, 20+ years or 40+ years
Category & Sub-category	A qualitative grading. See Table 1 (page 9) of BS5837:2012

Site name: Land off Tunkers Lane, Bury, Ramsey Surveyor: Ian Lorman	Date of survey: 5th May 2025 Conditions: Clear / dry / still	ARGENTA TREE SURVEYS

Tree number/Tag	Species	Tree height	Stem Dia (s)	RPA Radius RPA m2	Crown spread	1st large branch height above ground	Canopy height above ground	Life stage	Observations; structural / physiological condition and any preliminary recommendations	Estimated remaining contribution	Category &Sub category
1	Lime	14	625	7.50 177	N 6.5 E 6.5 S 6.5 W 6.5		3	Mature	Formal line of trees Physiological condition - Good ▪ Crown lift to 3 metres overhanging site (branch ends only)	40+	A2
2	Lime	14	600	7.20 163	N 6 E 6 S 6 W 6		3	Mature	Formal line of trees Physiological condition - Good ▪ Crown lift to 3 metres overhanging site (branch ends only)	40+	A2
3	Swedish Whitebeam	7	300	3.60 41	N 1.5 E 3.5 S 3 W 2.5		3	Mature	Not part of formal tree line Physiological condition - Good ▪ Crown lift to 3 metres overhanging site (branch ends only)	20+	C2
4	Lime	14	450	5.40 92	N 6 E 6 S 6 W 6		3	Mature	Formal line of trees Physiological condition - Good ▪ Crown lift to 3 metres overhanging site (branch ends only)	40+	A2
5	Lime	14	600	7.20 163	N 7 E 7 S 7 W 7		3	Mature	Formal line of trees Physiological condition - Good ▪ Crown lift to 3 metres overhanging site (branch ends only)	40+	A2
6	Lime	14	450	5.40 92	N 6 E 6 S 6 W 6		3	Mature	Formal line of trees Physiological condition - Good ▪ Crown lift to 3 metres overhanging site (branch ends only)	40+	A2
7	Lime	14	500	6.00 113	N 6 E 6 S 6 W 6		4	Mature	Formal line of trees Physiological condition - Good ▪ Crown lift to 3 metres overhanging site (branch ends only)	40+	A2

British Standard BS5837:2012

Site name: Land off Tunkers Lane, Bury, Ramsey Surveyor: Ian Lorman	Date of survey: 5th May 2025 Conditions: Clear / dry / still	ARGENTA TREE SURVEYS

Tree number/Tag	Species	Tree height	Stem Dia (s)	RPA Radius RPA m2	Crown spread	1st large branch height above ground	Canopy height above ground	Life stage	Observations; structural / physiological condition and any preliminary recommendations	Estimated remaining contribution	Category &Sub category
8	Lime	14	525	6.30 125	N 6 E 6 S 6 W 6		2	Mature	Formal line of trees Physiological condition - Good ▪ Crown lift to 3 metres overhanging site (branch ends only)	40+	A2
9	Lime	14	425	5.10 82	N 5 E 5 S 5 W 5		3	Mature	Formal line of trees Physiological condition - Good ▪ Crown lift to 3 metres overhanging site (branch ends only)	40+	A2
10	Lime	14	525	6.30 125	N 6 E 6 S 6 W 6		3	Mature	Formal line of trees Physiological condition - Good ▪ Crown lift to 3 metres overhanging site (branch ends only)	40+	A2
11	Swedish Whitebeam	7	200	2.40 18	N 3 E 3 S 3 W 3			Early-mature	Not part of formal tree line Physiological condition - Good ▪ Crown lift to 3 metres overhanging site (branch ends only)	20+	C2
12	Lime	14	400	4.80 72	N 5.5 E 5.5 S 5.5 W 5.5		4	Mature	Formal line of trees Physiological condition - Good ▪ Crown lift to 3 metres overhanging site (branch ends only)	40+	A2
13	Lime	13	375	4.50 64	N 5 E 5 S 5 W 5		3	Mature	Formal line of trees Physiological condition - Good ▪ Crown lift to 3 metres overhanging site (branch ends only)	40+	A2
14	Lime	13	500	6.00 113	N 6 E 6 S 6 W 6		2	Mature	Formal line of trees Physiological condition - Good ▪ Crown lift to 3 metres overhanging site (branch ends only)	40+	A2

British Standard BS5837:2012

Site name: Land off Tunkers Lane, Bury, Ramsey Surveyor: Ian Lorman	Date of survey: 5th May 2025 Conditions: Clear / dry / still	ARGENTA TREE SURVEYS

Tree number/Tag	Species	Tree height	Stem Dia (s)	RPA Radius RPA m2	Crown spread	1st large branch height above ground	Canopy height above ground	Life stage	Observations; structural / physiological condition and any preliminary recommendations	Estimated remaining contribution	Category &Sub category
15	Lime	13	500	6.00 113	N 6 E 6 S 6 W 6		3	Mature	Formal line of trees Physiological condition - Good ▪ Crown lift to 3 metres overhanging site (branch ends only)	40+	A2
16	Lime	12	425	5.10 82	N 5 E 5 S 5 W 5		3	Mature	Formal line of trees Physiological condition - Good ▪ Crown lift to 3 metres overhanging site (branch ends only)	40+	A2
17	Hornbeam 'Fastigiata'	12	425	5.10 82	N 5 E 5 S 5 W 5		3	Mature	Not part of formal tree line Physiological condition - Good ▪ Crown lift to 3 metres overhanging site (branch ends only)	40+	A2
18	Lime	12	425	5.10 82	N 5 E 5 S 5 W 5		2	Mature	Formal line of trees Physiological condition - Good ▪ Crown lift to 3 metres overhanging site (branch ends only)	40+	A2
19	Lime	12	450	5.40 92	N 6 E 6 S 6 W 6		2	Mature	Formal line of trees Physiological condition - Good ▪ Crown lift to 3 metres overhanging site (branch ends only)	40+	A2
20	Swedish Whitebeam	6	225	2.70 23	N 2 E 2.5 S 2 W 2		2	Mature	Typical Physiological condition - Good ▪ No action	20+	C2
21	Wild Cherry	6.5	75 75 75 75 75	2.01 13	N 3.5 E 3.5 S 3.5 W 3.5		1	Early-mature	Multiple stems from ground level Physiological condition - Good ▪ No action	20+	C1

British Standard BS5837:2012

Site name: Land off Tunkers Lane, Bury, Ramsey Surveyor: Ian Lorman			Date of survey: 5th May 2025 Conditions: Clear / dry / still					ARGENTA TREE SURVEYS			
Tree number/Tag	**Species**	**Tree height**	**Stem Dia (s)**	**RPA Radius** **RPA m2**	**Crown spread**	**1st large branch height above ground**	**Canopy height above ground**	**Life stage**	**Observations; structural / physiological condition and any preliminary recommendations**	**Estimated remaining contribution**	**Category &Sub category**
22	Common Ash	14	350 250 250 150	6.24 122	N 5 E 5 S 5 W 5		5	Early-mature	Dense ivy. Sparse crown. Poss Ash Dieback Disease Physiological condition - Poor ▪ No action	<10	U
23	English Elm	8.5	200	2.40 18	N 5 E 2.5 S 6.5 W 2.5		5	Early-mature	Dense ivy. Dieback Physiological condition - Poor ▪ Fell	<10	U
25	English Elm	9	200 200 200	4.16 54	N 4 E 4 S 4 W 4			Mature	Physiological condition - Dead ▪ Fell	<10	U
27	Common Ash	8	100	3.60 41	N 4 E 4 S 4 W 4			Early-mature	Multiple stems from ground level Physiological condition - Moderate ▪ Fell	20+	C2
28	English El	8	250	3.00 28	N 4 E 4 S 4 W 4			Early-mature	Physiological condition - Dead ▪ Fell	<10	U
30	Common Ash	11	300	3.60 41	N 5 E 5 S 5 W 5			Early-mature	Sparse foliage. Poss Ash Dieback Disease Physiological condition - Moderate ▪ No action	10+	C2
31	Common Hawthorn	6	200 100	2.68 23	N 3.5 E 3.5 S 3.5 W 3.5			Mature	Dense ivy Physiological condition - Moderate ▪ Fell	10+	C2

British Standard BS5837:2012

Site name: Land off Tunkers Lane, Bury, Ramsey Surveyor: Ian Lorman	Date of survey: 5th May 2025 Conditions: Clear / dry / still	ARGENTA TREE SURVEYS

Tree number/Tag	Species	Tree height	Stem Dia (s)	RPA Radius RPA m2	Crown spread	1st large branch height above ground	Canopy height above ground	Life stage	Observations; structural / physiological condition and any preliminary recommendations	Estimated remaining contribution	Category &Sub category
32	Common Ash	15	400	14.40 651	N 9 E 9 S 9 W 9		5	Mature	Sparse crown and dieback. Poss Ash Dieback Disease Physiological condition - Moderate ▪ Fell	10+	C2
33	Common Hawthorn	6	75 75 75	1.56 8	N 2.5 E 2.5 S 2.5 W 2.5			Mature	Typical Physiological condition - Good ▪ Fell	20+	C1
34	Common Ash	6.5	100 100	1.70 9	N 2.5 E 2.5 S 2.5 W 2.5			Early-mature	Typical Physiological condition - Moderate ▪ No action	20+	C1
35	Common Ash	9	300	3.60 41	N 4.5 E 4.5 S 4.5 W 4.5		2	Early-mature	Typical Physiological condition - Good ▪ No action	20+	B2
36	Common Oak	5	100	1.20 5	N 3 E 3 S 3 W 3			Early-mature	Typical Physiological condition - Good ▪ No action	40+	C2
37	Common Oak	6	125	1.50 7	N 3 E 3 S 3 W 3			Early-mature	Typical Physiological condition - Good ▪ No action	40+	C2
38	Common Oak	7	125	1.50 7	N 3 E 3 S 3 W 3			Early-mature	Typical Physiological condition - Good ▪ No action	40+	C1

British Standard BS5837:2012

Site name: Land off Tunkers Lane, Bury, Ramsey Surveyor: Ian Lorman	Date of survey: 5th May 2025 Conditions: Clear / dry / still	ARGENTA TREE SURVEYS

Tree number/Tag	Species	Tree height	Stem Dia (s)	RPA Radius RPA m2	Crown spread	1st large branch height above ground	Canopy height above ground	Life stage	Observations; structural / physiological condition and any preliminary recommendations	Estimated remaining contribution	Category &Sub category
39	Common Ash	12	300 300 300 300	7.20 163	N 5 E 5 S 5 W 5			Mature	Crown is 50% dead Physiological condition - Poor ▪ No action	<10	U
G1	Group / hedgerow comprising Hawthorn, Ash, Dogwood, Wayfaring Tree, Cherry. Trunk diameter up to 100 millimetres. Heights up to 5 metres. Good condition • Fell									40+	C2
G2	Group of Ash & Elm. Trunk diameters average 250 millimetres. Heights up to 12 metres. Several dead Elms within the group are starting to fall apart. Poor condition • Fell									20+	C2
G3	Group of Elm. Trunk diameters average 250 millimetres. Heights up to 9 metres. Dead or dying • Fell									<10	U
G4	Group of 2no. Hawthorn. Trunk diameters up to 100 millimetres. Heights up to 6 metres. Good condition • Fell									40+	C2
G5	Group predominantly of Elm with occasional Ash, Hawthorn and Plum. Trunk diameters up to 250 millimetres. Heights up to 8 metres. Poor condition • No action									<10	U
G6	Group predominantly of Elm. Trunk diameters up to 350 millimetres. Heights up to 15 metres. Mostly dead • No action									<10	U

British Standard BS5837:2012

Site name: Land off Tunkers Lane, Bury, Ramsey Surveyor: Ian Lorman			Date of survey: 5th May 2025 Conditions: Clear / dry / still					ARGENTA TREE SURVEYS			
Tree number/Tag	**Species**	**Tree height**	**Stem Dia (s)**	**RPA Radius** **RPA m2**	**Crown spread**	**1st large branch height above ground**	**Canopy height above ground**	**Life stage**	**Observations; structural / physiological condition and any preliminary recommendations**	**Estimated remaining contribution**	**Category &Sub category**
G7	Group predominantly of Elm. Trunk diameters up to 350 millimetres. Heights up to 15 metres. Mostly dead • Fell									<10	U
G8	Group of Crab Apples. Trunk diameters up to 250 millimetres. Heights up to 7 metres. Good condition • No action									20+	B2
G9	Group / row of Elm, Hawthorn and Cherry. Trunk diameters up to 150 millimetres. Heights up to 6 metres. Good condition • Prune back site side to accommodate development									20+	C2
G10	Group / row of Leyland Cypress, Cherry, Hawthorn and Crab Apple. Trunk diameters up to 100 millimetres. Heights up to 5 metres • Prune back site side to accommodate development									40+	C2
G11	Group / row of Cherry, Hawthorn and Oak. Trunk diameters up to 100 millimetres. Heights up to 5 metres. Good condition • Prune back site side to accommodate development									40+	C2
G12	Group (plantation) of Norway Spruce. Trunk diameters up to 100 millimetres. Heights up to 6 metres. Good condition • Fell									40+	C2
G13	Group of Elm and scrub. Trunk diameters up to 100 millimetres. Heights up to 5 metres • Fell									10+	C2

British Standard BS5837:2012