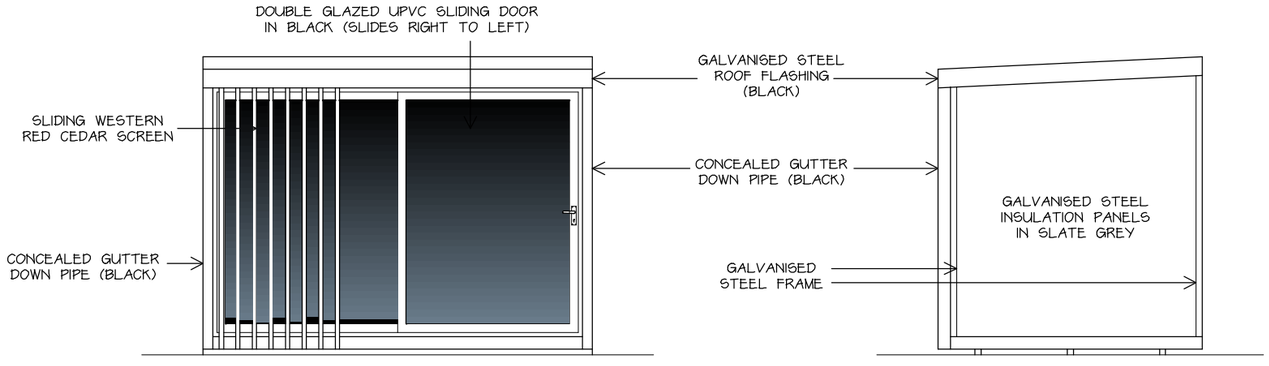

FRONT ELEVATION 1:50

RHS ELEVATION 1:50

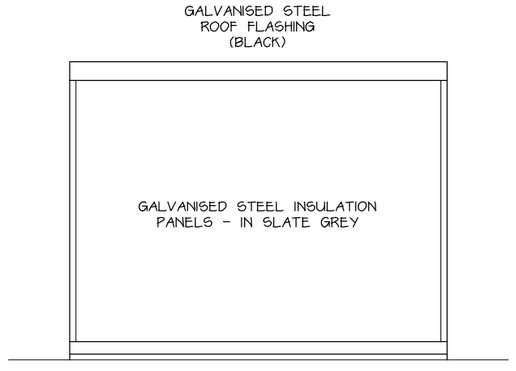

REAR ELEVATION 1:50



LHS ELEVATION 1:50

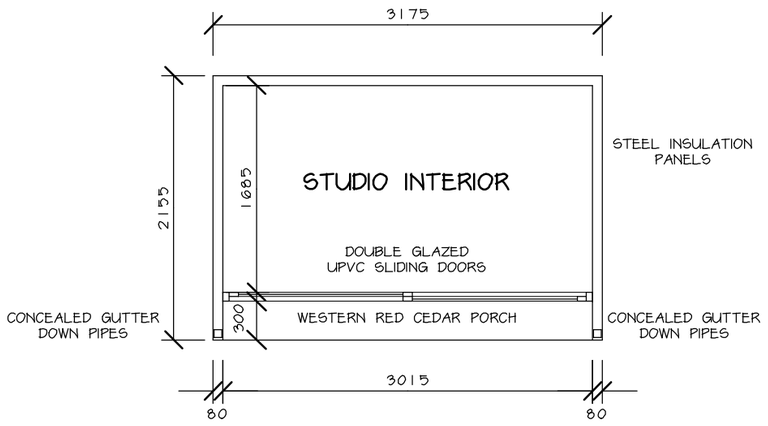

FLOOR PLAN 1:50

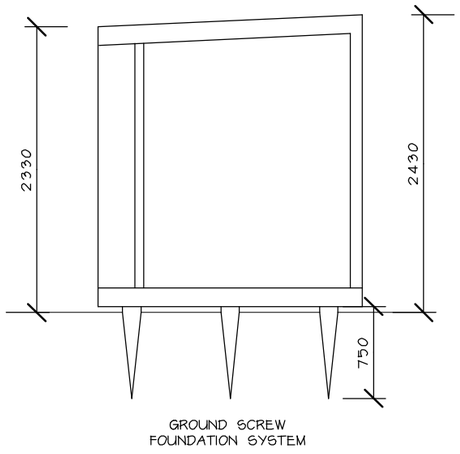

SECTION 1:50

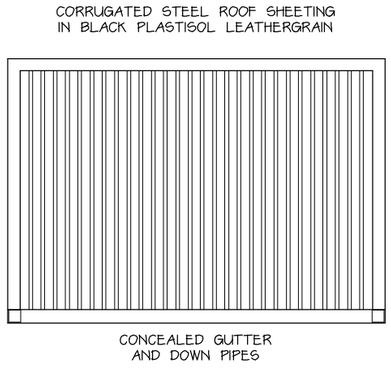

ROOF PLAN 1:50



FLOOR PLAN
ELEVATIONS
SECTION &
ROOF PLAN

SCALE: 1:50

STUDIO 03
ALL SLATE GREY

WOHOBO