Cambridge Trees Ltd

[redacted]
www.cambridge-trees.co.uk
[redacted]

Tree Survey,
Arboricultural Impact Assessment and
Tree Protection Plan to BS5837:2012

Report prepared for:
David & Anne Richardson
7 Mill Common
Huntingdon
PE29 3AU

Report prepared by:
John Talbot FdSc Arb MArborA
Cambridge Trees Ltd
39 London St
Godmanchester PE29 2HX

April 2022

Contents

1 Introduction 3

2 Site and development details 4

3 Tree Survey 4

4 Arboricultural Implications Assessment 12

5 Tree Protection Plan / Arboricultural Method Statement 14

Appendix A: BS5837:2012 Terms and Definitions 20

Appendix B: Example sign for use with tree protection fencing 21

1 Introduction

1.1 Report brief

This report has been commissioned by David and Anne Richardson to support a planning application for an extension to the property, and construction of a new section of driveway at 7 Mill Common.
The requirement is to carry out a survey of all trees on site with regard to proposed development, and to provide an Arboricultural Impact Assessment to BS5837 as a result.

1.2 Caveats and Limitations

1.2.1 This report is for the sole use of the client. Its reproduction or use by any other persons is forbidden unless express written consent is provided by Cambridge Trees Ltd

1.2.2 The survey was carried out from ground level – no climbed inspections were undertaken

1.2.3 This is an arboricultural report and relates only to the trees mentioned; suitable expert advice should be sought on other matters relating to the site, including and not limited to: construction, engineering, soil, ecology and archaeology

1.2.4 Dimensions and location of trees should be considered estimations for the purposes of this survey

1.2.5 Whilst tree condition is considered in the methodology used, this report should not be considered an assessment of tree condition or safety. Responsibility for the safety of trees on the site remains with the site owner.

1.2.6 Trees and shrubs are living organisms whose conditions can change rapidly. The findings of this report are therefore valid only for 12 months from the date on the header.

1.2.7 This report is designed to support a planning application. Should the planning process extend beyond 12 months from the date of this report, or changes on the site occur that impact the trees, it is recommended that the tree retention categories are reviewed prior to work commencing.

1.3 Documents

1.3.1 BS5837:2012 ‘Trees in relation to design, demolition and construction – Recommendations’ is the nationally recognised standard typically used by Local Planning Authorities (LPAs) to assess planning applications. It is frequently referred to in planning conditions to enforce protection or control of works that may be harmful to trees both on and off the site.

1.3.2 Each tree is allocated a category (A, B, C, U) according to it’s quality and (non-fiscal) value, which provides a guide as to it’s suitability for retention within the proposed development. Categorisation is defined using a cascade chart, included for reference in Section 3 of this report.

1.3.3 No topographical survey has been carried out, and no architect’s drawings of the proposed building work provided

1.4 Qualifications

The author of this report is John Talbot; I am the Director of Cambridge Trees Ltd. I have worked in arboriculture for 10 years as a climbing arborist, tree surveyor and consulting arboriculturist.
I have a Foundation Degree in Arboriculture, have the Lantra Certificate of Professional Tree Inspection and am a Professional Member of the Arboricultural Association

2 Site and development details

2.1 The site is based on a residential street on the outskirts of Huntingdon, backing onto Alconbury Brook.

2.2 The Huntingdonshire District Council website was checked on the 22nd April. A number of Tree Preservation Orders are shown to be in place, and the site is also within the Conservation Area; therefore the Local Planning Authority must be consulted before any tree work can take place.

3 Tree Survey

3.1 Methodology

3.1.1 The survey was carried out on Friday April 22nd, 2022. Weather conditions were fine and clear.

3.1.2 All observations have been made from ground level; no climbed inspections or detailed investigations have been carried out.

3.1.3 BS5837:2012 recommends that a tree survey is carried out during the initial planning stage of a development, and that the findings of the survey are used to ensure retention of better quality (Category A and B) trees where possible.
Where these better quality trees cannot be reasonably retained, replacement planting can be carried out to mitigate their loss.

3.2 Key to Tree Survey and Plans

3.2.1 Life Stage:

Y	Young
EM	Early Mature
MA	Middle Aged
M	Mature
OM	Over Mature
V	Veteran

3.2.2 DBH

'Diameter at Breast Height' – the stem diameter measured in millimetres at 1.5m above ground level. Where the ground around the base of the tree is not level this is taken 1.5m above the upper side of the slope.

3.2.3 Crown Spread

The spread of the crown in metres, shown to the nearest half metre to the four cardinal points of the compass

3.2.4 ERC

Estimated Remaining Contribution: the amount of time a tree is likely to be retained for, recorded in a range of years

<10	Unsuitable for retention
10-20	Suitable for retention in the short term
20 – 40	Will continue to offer benefits for the foreseeable future
40+	Good longevity potential

3.2.5 BS Category

The category assigned to each tree according to BS5837:2012; full details in the cascade chart below:

BS5837 Cascade Chart for Tree Quality Assessment

Category and definition	Criteria (including subcategories where appropriate)		
Trees unsuitable for retention (see Note)			
Category U Those in such a condition that they cannot realistically be retained as living trees in the context of the current land use for longer than 10 years	• Trees that have a serious, irremediable, structural defect, such that their early loss is expected due to collapse, including those that will become unviable after removal of other category U trees (e.g. where, for whatever reason, the loss of companion shelter cannot be mitigated by pruning) • Trees that are dead or are showing signs of significant, immediate, and irreversible overall decline • Trees infected with pathogens of significance to the health and/or safety of other trees nearby, or very low quality trees suppressing adjacent trees of better quality NOTE Category U trees can have existing or potential conservation value which it might be desirable to preserve; see 4.5.7.		
	1 Mainly arboricultural qualities	2 Mainly landscape qualities	3 Mainly cultural values, including conservation
Trees to be considered for retention			
Category A Trees of high quality with an estimated remaining life expectancy of at least 40 years	Trees that are particularly good examples of their species, especially if rare or unusual; or those that are essential components of groups or formal or semi-formal arboricultural features (e.g. the dominant and/or principal trees within an avenue)	Trees, groups or woodlands of particular visual importance as arboricultural and/or landscape features	Trees, groups or woodlands of significant conservation, historical, commemorative or other value (e.g. veteran trees or wood-pasture)
Category B Trees of moderate quality with an estimated remaining life expectancy of at least 20 years	Trees that might be included in category A, but are downgraded because of impaired condition (e.g. presence of significant though remediable defects, including unsympathetic past management and storm damage), such that they are unlikely to be suitable for retention for beyond 40 years; or trees lacking the special quality necessary to merit the category A designation	Trees present in numbers, usually growing as groups or woodlands, such that they attract a higher collective rating than they might as individuals; or trees occurring as collectives but situated so as to make little visual contribution to the wider locality	Trees with material conservation or other cultural value
Category C Trees of low quality with an estimated remaining life expectancy of at least 10 years, or young trees with a stem diameter below 150 mm	Unremarkable trees of very limited merit or such impaired condition that they do not qualify in higher categories	Trees present in groups or woodlands, but without this conferring on them significantly greater collective landscape value; and/or trees offering low or only temporary/transient landscape benefits	Trees with no material conservation or other cultural value

3.3 Observations and Analysis

The site is a residential area with houses to either side

The majority of the trees are mature and contribute to the amenity of the area

BS 5837:2012 Tree Survey

Site: 7 Mill Common Huntingdon

Date: April 22nd, 2022

No.	Tree Species	Latin Name	Life Stage	DBH (mm)	Crown Spread				Height (m)	ERC (<10, 10+, 20+, 40+)	RPA Radius (m)	BS Category	Comments and recommendation
					N	S	E	W					
1	Yew	*Taxus baccata*	SM	350	2.5	2	2	4.2	6	40+	C	C	Retain and protect
2	Yew	*Taxus baccata*	SM	350	2	2	2	4.2	6	40+	B	B	Retain and protect
3	Indian Bean Tree	*Catalpa bignonioides*	M	500	4	5	6	6	9	20+	B	B	Good quality ornamental tree. Retain and protect
4	Holly	*Ilex aquilifolium*	Y	150	1	1	1	1.8	4	40+	C	C	Retain and protect
5	Dawn Redwood	*Metasequoia glyptosrobiodes*	M	400	4	2	4	4	15	40+	4.8	B	Good quality ornamental tree. Retain and protect
6	Pride of India	*Koelreuteri apaniculata*	M	600	5	9	6	4	10	20+	7.2	B	Good quality ornamental tree. Retain and protect
7	Arizona Cypress	*Cupressus arizonica*	M	600	3	6	3	6	11	40+	7.2	B	Retain and protect
8	Holly	*Ilex aquifoliuim*	Y	150	1.5	1	1	1	5	40+	1.8	C	Low quality tree Remove if required – should not impede development

No.	Tree Species	Latin Name	Life Stage	DBH (mm)	Crown Spread				Height (m)	ERC (<10, 10+, 20+, 40+)	RPA Radius (m)	BS Category	Comments / recommendation
					N	S	E	W					
9	Cypress	Cupressus spp	M	400	2	3	2	2	10	20+	4.8	C	Fell due to proximity to property
10	Variegated Holly	*Ilex aquifolium*	M	200	2	2	2	3	6	40+	2.4	C	Retain and protect
11	Cherry	*Prunus spp*	M	300	5	2	2	5	6	<10	3.6	C	Declining tree in poor condition Fell and replace with similar ornamental species e.g. Cherry, Magnolia, Foxglove tree
12	Leylandii	*Cupressus x leylandii*	M	400	5	4	5	4	14	40+	4.8	C	Consider removal as part of landscape plan. Protect if retained
13	Western Red Cedar	*Thuja plicata*	M	400	3	3	5	5	10	40+	4.8	C	Consider removal as part of landscape plan. Protect if retained
14	Cherry Plum	*Prunus cerasifera*	M	300	5	5	3	5	7	20+	3.6	B	Good quality tree. Retain and protect
G1	Cypress	Cupressus spp	Y	120	2	2	2	4	5	40+	1.4	U	Consider removal as part of landscape plan. Protect if retained
16	Apple	*Malus domestica*	M	250	4	2	1	2	4	<10	3	C	Split at base. Fell and replace with Apple or Pear
17	Apple	*Malus domestica*	M	350	4	2	1	2	5	20+	4.2	B	Good quality tree. Retain and protect
18	Cypress	Cupressus spp	M	350	2	2	2	2	10	20+	4.2	B	Fell to allow driveway construction
G2	Yew	*Taxus baccata*	SM	200	3	3	3	3	7	40+	2.4	C	Retain and protect
22	Hornbeam	*Carpinus betulus*	SM	200	4	4	4	1	8	40+	2.4	C	Crown lift to 4m over garage
23	Cypress	Cupressus spp	SM	250	2	3	3	1	10	20+	3	C	Consider removal as part of landscape plan. Protect if retained
24	Holly	*Ilex aquifolium*	SM	250	0	4	4	1	6	20+	3	C	Leaning heavily (appears stable)
25	Hazel	*Corylus avellana*	M	200	3	3	3	3	5	20+	2.4	C	Retain and protect

No.	Tree Species	Latin Name	Life Stage	DBH (mm)	Crown Spread				Height (m)	ERC (<10, 10+, 20+, 40+)	RPA Radius (m)	BS Category	Comments / recommendation
					N	S	E	W					
26	Apple	*Malus domestica*	M	400	5	5	5	5	7	20+	4.8	B	Fell to allow driveway construction
27	Spruce	*Picea spp*	SM	250	2.5	2.5	2.5	2.5	14	40+	3	C	Consider removal as part of landscape plan. Protect if retained
28	Spruce	*Picea spp*	SM	200	2	2	2	2	8	40+	3	C	Consider removal as part of landscape plan. Protect if retained
29	Cypress	Cupressus spp	M	350	2	2	2	2	9	40+	3	B	Fell to allow driveway construction
30	Cypress	Cupressus spp	M	400	2	2	2	2	9	40+	4.8	B	Fell to allow driveway construction
31	Yew	*Taxus baccata*	M	350	4	4	4	4	7	40+	4.2	B	Reduce laterally 1.5m on eastern side to improve access
G3	Laurel	*Prunus laurocerasus*	M	300	6	3	6	3	7	20+	3.6	U	Fell to allow property extension
G4	Portuguese Laurel	*Prunus lusitanica*	M	300	5	4	5	4	7	20+	3.6	U	Fell to allow property extension
34	Leylandii	*Cupressus x leylandii*	M	350	5	4	3	1	8	20+	4.2	C	Low quality tree. Fell
35	Leylandii	*Cupressus x leylandii*	M	350	5	1	3	4	8	20+	4.2	C	Low quality tree. Fell
36	Ash	*Fraxinus excelsior*	M	500	9	9	4	9	20	40+	6	B	Good quality tree, particularly as part of group
37	Ash	*Fraxinus excelsior*	M	500	5	5	6	2	20	40+	6	B	Good quality tree, particularly as part of group
38	Ash	*Fraxinus excelsior*	M	500	2	9	9	9	20	40+	6	B	Good quality tree, particularly as part of group
39	Ash	*Fraxinus excelsior*	M	350	4	7	7	7	12	40+	4.2	B	On boundary – ownership unclear
40	Cherry Plum	*Prunus cerasifera*	M	250	3	3	3	2	8	20+	3	C	Retain or remove as preferred
G5	Leylandii	*Cupressus x leylandii*	M	300	3	3	3	3	8	20+	3.6	C	Large hedge. Reduce to 5m or remove and replace with Beech or Hornbeam hedge

No.	Tree Species	Latin Name	Life Stage	DBH (mm)	Crown Spread				Height (m)	ERC (<10, 10+, 20+, 40+)	RPA Radius (m)	BS Category	Comments / recommendation
					N	S	E	W					
41	Ash	*Fraxinus excelsior*	M	350	7	7	4	7	12	40+	4.2	B	No work required
42	Ash	*Fraxinus excelsior*	M	300	1	4	4	3	12	40+	4.2	C	No work required
43	Birch	*Betula pendula*	M	350	3	3	6	4	10	20+	4.2	B	Remove ivy to base. Remove dead wood
44	Persian Ironwood	*Parrotica persica*	M	300	2	3	3	3	4	20+	3.6	B	Good quality ornamental tree. No work required
45	Gingko	*Gingko biloba*	M	250	3	3	2	3	8	20+	3	B	Good quality ornamental tree. No work required
46	Mulberry	*Morus alba*	M	350	4	5	5	5	6	40+	4.2	B	Good quality ornamental tree. No work required
47	Handkerchief tree	*Davidia involucrata*	M	300	3	3	3	4	6	10+	3.6	C	Poor specimen due to previous pruning work. Recommend fell and replace with ornamental species e.g. Liquidambar or Tulip Tree
48	Holly	*Ilex aquifolium*	SM	200	0	2	2	2	200	20+	2.4	C	Poor form – fell and replace
49	Hybrid Black Poplar	*Populus x canadensis*	M	1200	4	10	10	9	16	20+	14.4	C	Badly storm damaged, Decay at base. Monitor annually
50	Ash	*Fraxinus excelsior*	M	350	6	7	5	2	12	40+	4.2	C	No work required
G7	Elm	*Ulmus minor*	SM	200	2	5	10	5	7	<10	2.4	C	Likely to suffer and die from from Dutch Elm disease – monitor annually
51	Corkscrew Willow	*Salix matsudana*	SM	200	0	3	6	4	7	<10	2.4	C	Decay throughout – fell
52	Indian Bean Tree	*Catalpa bignonioides*	Y	200	2	3	3	3	4	40+	2.4	C	Good quality ornamental tree. No work required
53	Lawson's Cypress	*Chamaecyparis lawsoniana*	SM	200	3	3	3	3	8	20+	2.4	C	Consider removal as part of landscape plan.
54	Holly	*Ilex aquifolium*	SM	200	2	2	2	2	6	20+	2.4	B	Good quality tree – retain unless removal required as part of landscape plan

3.4 Site Map

Figure 1: Site plan showing location of trees and proposed house extension

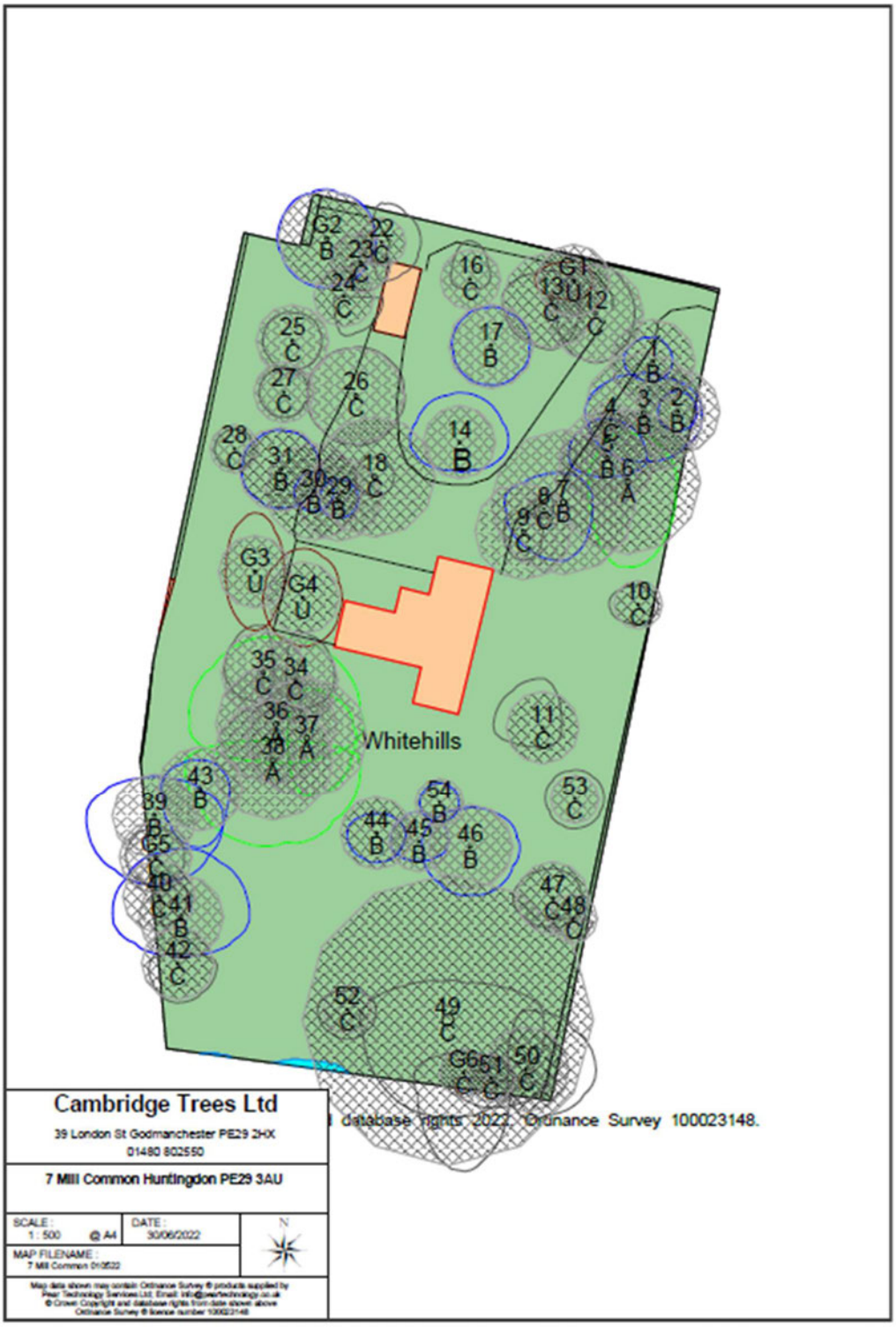

4 Arboricultural Implications Assessment

4.1 Introduction

4.1.1 The trees on the site have been recorded using the methodology provided by BS5837:2012 and the above and below ground constraints mapped accordingly

4.2 Observations

4.2.1 T1 – T8 – trees to east of driveway: largely a group of fine ornamental trees. Install RPA fence at side of driveway as shown on plan. T9 Cypress: fell due to minimal amenity value and proximity to property

4.2.2 West of driveway entrance (T12, T13, G1): these trees provide good screening however offer little amenity value. These trees could be removed to facilitate extension of the Hornbeam hedge on the front boundary, and replacement with an additional ornamental tree e.g. Betula utilis jacquemontii or Betula albosinenis. Hornbeam hedge on front boundary should be maintained to previous cut points at approx. 1.8m

4.2.3 Area to north of drive: new driveway construction will require removal of Cypresses T18, 29 & 30, and Apple T26. These are large trees however offer minimal amenity value. T16 Apple is in poor condition – remove and replace with Apple or Pear. Retain and protect T14 & T17

4.2.4 Area to west of driveway: G3 Laurel, G4 Portuguese Laurel: remove to facilitate extension to property and construction of garage. T31 Yew to be retained and protected.
The driveway will extend to approx. 2.7 metres from the stem of T31 on the eastern side. This will encroach on the rootzone, however a maximum of 15% of the rootzone will be affected. No other construction activity should take place within 4m of the stem.

4.2.5 Area to west of existing garage and proposed new driveway:
G3, T22, T23, T24, T25 & T27 can be retained and should be protected during construction.
Crown lift T22 to 4m to improve access beneath

4.2.6 Rear of house: T34, T35: poor quality Leylandii. Minimal amenity value: fell to ground level

4.2.7 Rear of house: T36, T37, T38, Ash, T43 Birch: High quality trees: retain

4.2.8 West of back garden: G5 Leylandii hedge provides some screening however has not been maintained and is in poor condition. Reduce to 6m and trim sides, or remove
T39, 40, 41 & 42 should be retained

4.2.9 North of back garden:

T44, 45, 46, 54: a group of good quality ornamental trees which should be retained

4.2.10 East of back garden:

T53 Cypress – tree of minor value which could be retained or removed as preferred

T47 Handkerchief tree: poor quality tree due to previous pruning work and / or storm damage. The tree is not dangerous however could be removed and replaced due to its poor form.

T48 Holly: minor low quality tree that could be replaced

Suggested replacements for T47 & T48: Tulip Tree, Liquidambar

4.2.11 South of back garden:

T52 Catalpa: good quality tree that should be retained

T49 Poplar: a large mature tree with extensive damage in the upper crown and signs of decay in the main stem. The tree is well away from buildings and public thoroughfares, however its condition should be monitored annually to reduce the risk of unexpected failure

T51 is largely dead and should be removed

G6: group of Elm that will likely succumb to Dutch Elm disease. Monitor annually; fell if dead

T50 Ash is leaning over the river and should be monitored regularly for stability

5 Tree Protection Plan / Arboricultural Method Statement

5.1 Purpose and Communication

5.1.1 Trees may be adversely affected by building works in a number of ways. These include damage by chemicals or other substances such as cement, soil compaction through the use of heavy machinery, damage to roots from excavation and direct stem and branch damage by machines such as excavators.

5.1.2 The purpose of the Tree Protection Plan is to provide detail of the specific measures that must be implemented on site to ensure the protection of trees that could be adversely affected by building works.

5.1.3 In order for the TPP to be effectively implemented, it must be distributed to all parties involved in the planning and construction process.

5.1.4 The person with overall responsibility for the site shall ensure that:

- All relevant staff are aware of and have been provided with this document
- The requirements of this Tree Protection Plan have been met before the commencement of work on site
- Staff are made aware of any changes to the document as work progresses
- Tree protection measures remain in place for the duration of work on site

5.2 Tree Protection Plan Site Layout

The plan below shows the location of trees on site, and the location of fences which should be installed as recommended in BS5837 to protect retained trees from damage during construction.

Figure 2: Site plan showing location of tree protection fencing

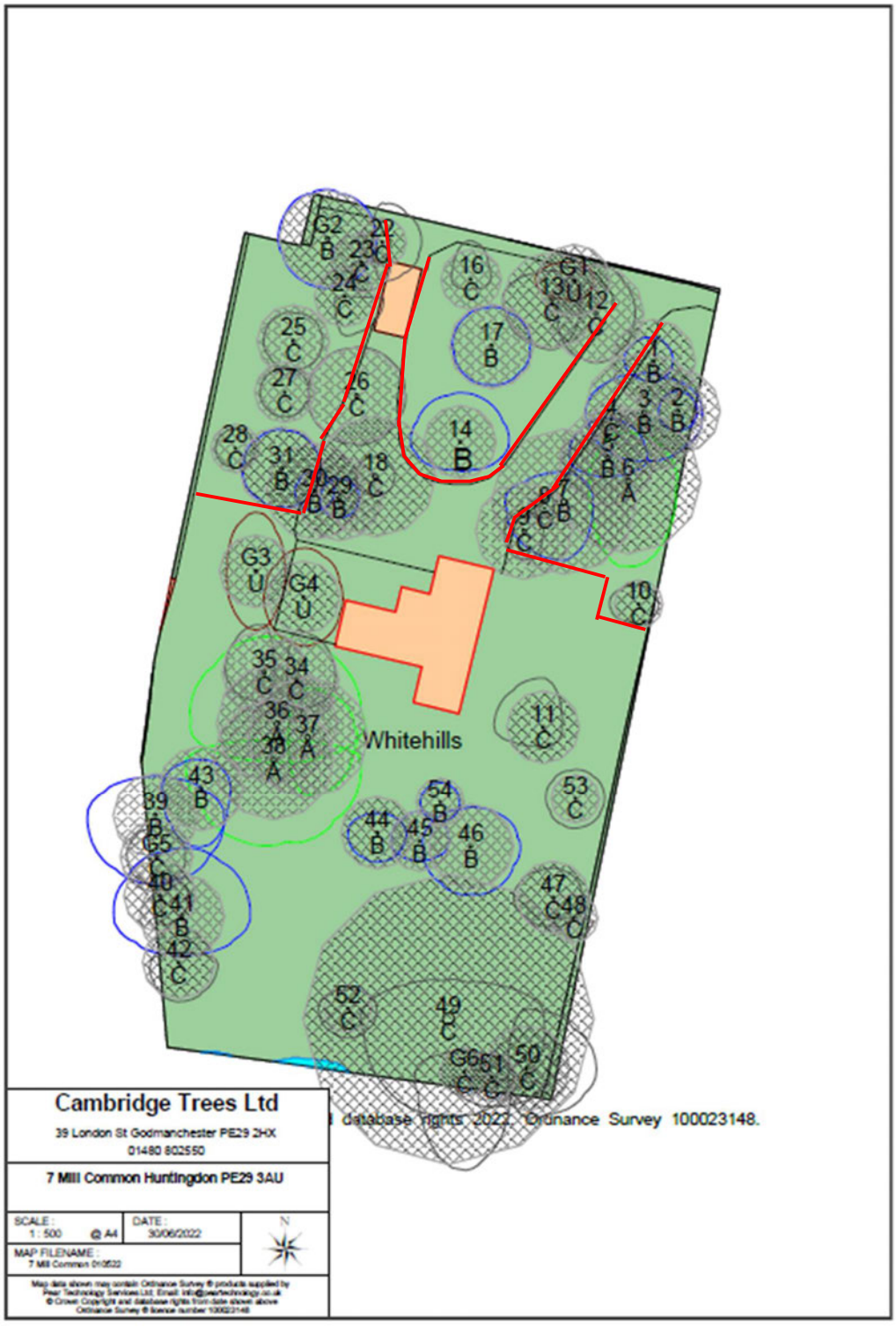

5.3 Prohibited activities

The following activities must not take place under any circumstances:

- Cutting, felling, uprooting, damaging or destroying any retained tree
- Use or storage of any chemicals or substances that may be harmful to trees within, or upslope of the RPA, including mixing cement and positioning of site toilets
- Use or storage of any heavy items such as storage containers and mechanical excavators within the RPA
- Operation of any plant with a hydraulic arm within striking distance of any retained tree
- Lighting a fire within 10 metres of the canopy of any retained tree
- Alteration of movement of approved tree protection measures without prior written approval from the Local Authority

5.4 Incident Management

If the tree protection measures are breached for any reason, the following procedures should be followed:

- The site manager should be informed immediately
- The Local Authority should be contacted and their advice sought
- Action should be taken immediately to stop the breach and prevent future occurrences
- The damage caused shall be assessed and appropriate mitigation measures implemented

5.5 Tree Works

5.5.1 General

All tree works will be carried out by a competent and suitably qualified and insured arboricultural contractor, with work conforming to BS3998:2010 and other recognized best practice standards.
A method statement detailing the work will be submitted and approved by the site manager before commencement of tree work.

5.5.2 Tree removal

Trees will be assessed for the presence of protected species before commencement of works. Should protected species be discovered, the advice of a suitably qualified ecologist should be sought before any work that may disturb wildlife is carried out.
Trees will be felled or dismantled on site as appropriate and arising material removed to the contractor's premises.

5.5.3 Order of works

Construction works should be carried out in the following order unless otherwise agreed in writing with the Local Authority:

1. Work to trees as follows:
    a. Pruning work to facilitate access
    b. Removal and stump grinding of trees not being retained
2. Installation of protective fencing around retained trees
3. Construction. No activity should take place within the areas surrounded by RPA fencing.
4. Removal of protective barriers and other measures
5. Planting of replacement trees

5.6 Protective Barriers

5.6.1 BS5837:2012 specifies the type of protective barrier to be used in Tree Protection. Section 6.2.2 reads as follows:

'The default specification should consist of a vertical and horizontal scaffold framework, well braced to resist impacts, as illustrated in Figure 1. The vertical tubes should be spaced at a maximum interval of 3 m and driven securely into the ground. Onto this framework, welded mesh panels (Heras or similar) should be securely fixed. Care should be exercised when locating the vertical poles to avoid underground services and, in the case of the bracing poles, also to avoid contact with structural roots.'

Figure 2: Default specification for protective barrier

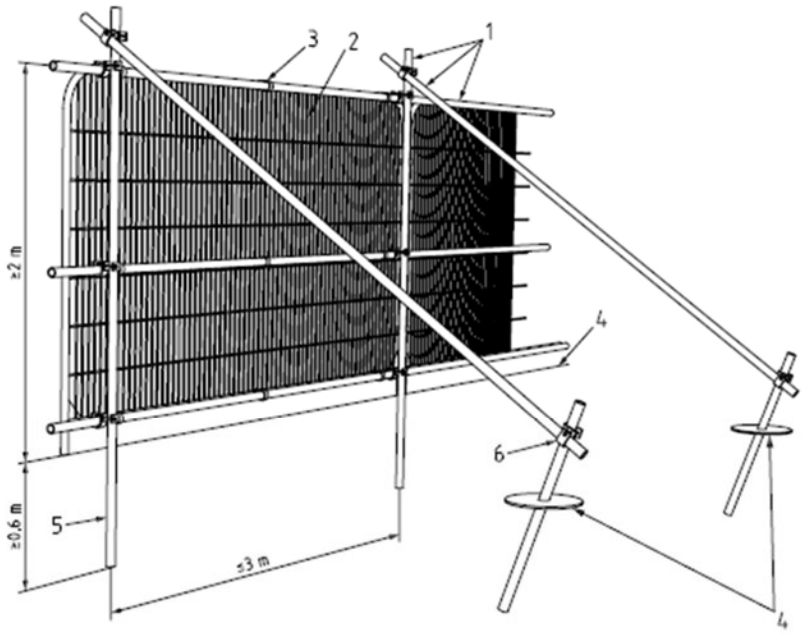

Key

1 Standard scaffold poles
2 Heavy gauge 2 m tall galvanized tube and welded mesh infill panels
3 Panels secured to uprights and cross-members with wire ties
4 Ground level
5 Uprights driven into the ground until secure (minimum depth 0.6 m)
6 Standard scaffold clamps

5.6.2 BS5837:2012 also allows for alternative methods of barrier installation where underground services or hard ground level surfacing prohibit installation of supporting poles into the ground. Figure 3 below details this method of barrier installation

Figure 3: Examples of above-ground stabilizing systems

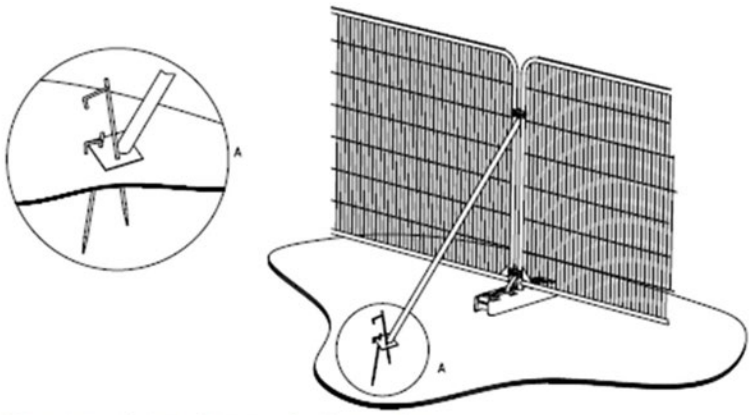

a) Stabilizer strut with base plate secured with ground pins

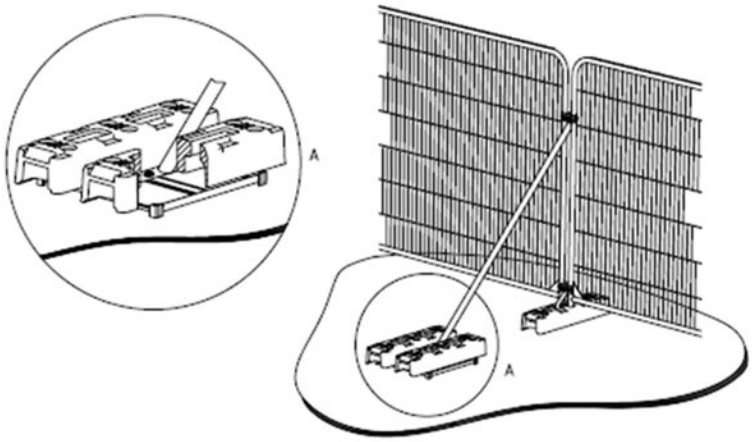

b) Stabilizer strut mounted on block tray

5.6.3 Installation of protective fencing

Figure 1 (Section 5.2) shows where the protective fencing should be installed on site and the RPAs that it is designed to protect.

5.5.4 Signage

All-weather notices such as that provided in Appendix B should be affixed securely to the fencing to alert site workers to the presence and purpose of the fencing.

For the purposes of this British Standard, the following terms and definitions apply.

2.1. access facilitation pruning
one-off tree pruning operation, the nature and effects of which are without significant adverse impact on tree physiology or amenity value, which is directly necessary to provide access for operations on site

2.2. arboricultural method statement
methodology for the implementation of any aspect of development that is within the root protection area, or has the potential to result in loss of or damage to a tree to be retained

2.3. arboriculturist
person who has, through relevant education, training and experience, gained expertise in the field of trees in relation to construction

2.4. competent person
person who has training and experience relevant to the matter being addressed and an understanding of the requirements of the particular task being approached
NOTE A competent person is expected to be able to advise on the best means by which the recommendations of this British Standard may be implemented.

2.5. conservation area
an area of special architectural interest, the character or appearance of which it is desirable to preserve or enhance

2.6. construction
site-based operations with the potential to affect existing trees

2.7. construction exclusion zone
area based on the root protection area (**3.7**) from which access is prohibited for the duration of a project

2.8. root protection area (RPA)
layout design tool indicating the minimum area around a tree deemed to contain sufficient roots and rooting volume to maintain the tree's viability, and where the protection of the roots and soil structure is treated as a priority

2.9. service
any above- or below-ground structure or apparatus required for utility provision
NOTE Examples include drainage, gas supplies, ground source heat pumps, CCTV and satellite communications.

2.10. stem
principal above-ground structural component(s) of a tree that supports its branches

2.11. structure
manufactured object, such as a building, carriageway, path, wall, service run, and built or excavated earthwork

2.12. tree protection plan

scale drawing, informed by descriptive text where necessary, based upon the finalized proposals, showing trees for retention and illustrating the tree and landscape protection measures

2.13. tree preservation order

a written order made by a local planning authority (e.g. a borough, district or unitary council or a national park authority) which, in general, makes it an offence to cut down, top, lop, uproot, wilfully damage or wilfully destroy a tree protected by that order without the authority's permission.

2.14. veteran tree

tree that, by recognized criteria, shows features of biological, cultural or aesthetic value that are characteristic of, but not exclusive to, individuals surviving beyond the typical age range for the species concerned
NOTE These characteristics might typically include a large girth, signs of crown retrenchment and hollowing of the stem. [BS 3998:2010]

Appendix B: Example sign for use with tree protection fencing

TREE PROTECTION BARRIER



Construction Exclusion Zone:

For purposes of tree protection, no access beyond this barrier is permitted