TPS

TREE PROTECTION SCHEME

(INC. ARBORICULTURAL METHOD STATEMENT & TREE PROTECTION PLAN)



PROJECT - Spillers Yard
CLIENT - Shelford Tree Services Ltd
DOC. REF - P4200–TPS01 V1
PLANNING REF - N/A
CREATION DATE - 19/12/2024

W. www.lignaconsultancy.co.uk T. 01284 598008 E. info@lignaconsultancy.co.uk

This report was prepared for use by the clients and their contractors for risk and condition management purposes. The report and its appendices may not be modified without the written consent of Ligna Consultancy Ltd.

TABLE OF CONTENTS

1 GENERAL INFORMATION 2
2 RESPONSIBILITIES 6
3 PHASING & SUPERVISION 8
4 TREE WORKS 9
5 ARBORICULTURAL GUIDANCE NOTES 10
6 APPENDICES 17

PURPOSE OF DOCUMENT

This document details the methodology behind the installation of any required tree protection measures, and any demolition and construction activities with the potential to cause harm to the site's trees.

The methods outlined in this document must be implemented as per this document. Failure to do so may result in a breach of planning or significant fines.

ARBORICULTURAL DOCUMENT REGISTER

Planning Documents		Version Issued	
Document	Ref.	Current Version	Document Date
Arb. Impact Assessment	P4200-AIA01	V1	19/12/2024
Arb. Site Plan (Existing)	P4200-ASP01	V1	19/12/2024
Arb. Site Plan (Proposed)	P4200-ASP02	V1	19/12/2024

Technical Documents		Version Issued	
Document	Ref.	Current Version	Document Date
Tree Protection Scheme	P4200-TPS01	V1	19/12/2024

1 GENERAL INFORMATION

1.1 BRIEF

1.1.1 Ligna Consultancy Ltd were instructed by the client, Shelford Tree Services Ltd, to prepare a Tree Protection Scheme, comprising of an Arboricultural Method Statement and Tree Protection Plan/s for the proposed scheme at Spillers Yard.

1.2 PROPOSED DEVELOPMENT

1.2.1 Installation of shed, greenhouse, decking and new surfacing.

1.3 USE OF DOCUMENT

1.3.1 This document has been produced to assist key design and construction personnel in ensuring the satisfactory protection of all important trees present within the development site.

1.4 SITE

1.4.1 The site discussed within this report is located at:

Spillers Yard, Raunds Road, Keyston, Huntingdon

1.5 SCOPE OF DOCUMENT

1.5.1 This document consists of the following:

- Arboricultural Method Statement

1.5.2 Appendices included with this report are:

No.	Appended Document
1	Tree Protection Plan (P4200-TPP01 V1)
2	CEZ Notice
3	Schedule of Arboricultural Supervision

1.5.3 The following documents were submitted to Ligna Consultancy Ltd for consideration:

No.	Supplied Document
1	Existing Site Plan (3. Existing and Proposed site plan-compressed)
2	Proposed Site Plan (3. Existing and Proposed site plan-compressed)

1.6 PROJECT CONTACT

Role	Name	Telephone	Email
Arboricultural Consultant	Alistair Godfrey	01284 598008	alistair@lignaconsultancy.co.uk

1.7 AUTHOR

1.7.1 Alistair Godfrey is a tree surveyor. He has worked in arboriculture for over 6 years, initially working with tree surgery firms to carry out domestic tree work operations. He has worked at Cambridge University Botanic Gardens for 3 years on the Tree and Shrub team and has recently worked on a large-scale tree planting plan with the National Trust. He has a level 4 Certificate in arboriculture and LANTRA Professional Tree Inspection.

1.7.2 This report has been checked and edited by Benjamin Hallinan MArborA.

1.8 LIMITATIONS

1.8.1 Detailed inspections and recommendations relating to tree condition and health are not included within this report.

1.8.2 Any engineering solutions presented within this document are recommendations for their suitability from an arboricultural viewpoint. The architect and structural engineers should make the final decision on the suitability of the methods advised.

1.8.3 Information provided by third parties, considered in the creation of this report, is assumed to be correct.

1.9 PROTECTED TREES

1.9.1 Details of trees (if any) that are protected by Tree Preservation Orders (TPOs) or are situated within Conservation Area are available upon request.

1.9.2 It is the standard approach of Ligna Consultancy not to obtain this information from the LPA prior to an application, as the LPA will provide details of nearby protected trees as part of the consultation.

1.9.3 It should also be noted that granted planning permission that includes tree work specifications overrides Tree Preservation Orders and Conservation Area protections (approved works only).

1.10 NESTING BIRDS / BATS

1.10.1 Officially, the 'Bird Nesting Season' is between February and August (Natural England). During this time, it is recommended that vegetation works (tree or hedge cutting) or site clearance is avoided if there is a reasonable potential for the disruption of nesting birds.

1.10.2 All parties involved in the management and/or development of a site must actively avoid causing disturbance and disruption to nesting birds. Failure to do this may result in an infringement of the *Wildlife and Countryside Act 1981* and the *European Habitats Directive 1992 / Nesting Birds Directive*.

1.10.3 When tree or vegetation clearance work has to be undertaken during the nesting season, a pre works survey needs to be carried out by a suitably competent person.

1.10.4 All bats and their roosts are protected by domestic and international legislation. They are protected by the Wildlife and Countryside Act 1981 (as

amended) and the Conservation of Habitats and Species Regulations (2017 – as amended). This means you may be committing a criminal offence if you: Deliberately take, injure or kill a wild bat; Intentionally or recklessly disturb a bat in its roost or deliberately disturb a group of bats; Damage or destroy a place used by bats for breeding or resting (roosts) (even if bats are not occupying the roost at the time); Intentionally or recklessly obstruct access to a bat roost.

1.10.5 Prior to carrying out any tree works it is recommended that a survey of the tree/ trees is carried out to confirm whether there are any nesting birds or bat roosts. This should be carried out by a suitably trained person.

1.11 SUMMARY OF TERMS

Term	Definition
Species	The type of tree.
Stem	The main woody upright portion of a tree that is supported by the roots and supports the crown.
Branch Spread	The length of a tree's branches from stem to tip measured from the north, east, south and western sides of the crown.
BS 5837	The commonly used name for the official guidance document relating to trees and development *(BS 5837:2012 - Trees in relation to design, demolition and construction – Recommendations)*
Canopy / Crown	The branches, leaves, and reproductive structures extending from the trunk or main stems of a tree/trees.
DBH	Diameter of a tree's stem, measured as per BS 5837:2012
RPA	The root protection area (RPA) is a layout design tool indicating the minimum area around a tree deemed to contain sufficient roots and rooting volume to maintain the tree's viability, and where the protection of the roots and soil structure is treated as a priority.
Facilitation Tree Works	Tree pruning/felling required in order to facilitate the implementation of the proposed development.
Tolerance	The relative tolerance the species can show to construction related activities such as root-loss, soil compaction and other development pressures.
Category (Cat.)	Categorisation of the tree's value based on the methodology shown in Appendix 1, A1.4. This rating takes into account the size, quality, condition, estimated remaining life expectancy and legal status of each tree.

1.12 LIMITATIONS

1.12.1 Any engineering solutions presented within this document are recommendations for their suitability from an arboricultural viewpoint. The architect and structural engineers should make the final decision on the suitability of the methods advised.

1.12.2 Information provided by third parties, considered in the creation of this report, is assumed to be correct.

1.13 COPYRIGHT

1.13.1 This report was prepared for use by the Clients and their contractors for planning purposes. The report and its appendices may not be copied,

modified, or distributed beyond the necessary parties without the written consent of Ligna Consultancy Ltd

2 RESPONSIBILITIES

2.1 DISTRIBUTION

2.1.1 It is important to ensure everyone involved in the planning and design of the proposed development is aware of this report and has access to a copy as soon as it is released.

2.2 RESPONSIBILITIES

2.2.1 Successful implementation of tree protection measures and long-term tree retention depends on coordination between the client and key personnel involved in the development.

2.2.2 The client and agent shall ensure that:

• The site manager and all other personnel are provided with this document.
• All planning conditions relating to underground works, services, trees, and landscaping are cleared before development commences.
• All requirements of this Tree Protection Plan are adhered to.
• The site manager is updated of any approved changes or variations to this document

2.2.3 The client and site manager shall ensure that:

• A copy of this document with the plan is easily accessible for site personnel to refer to before and during the time construction activity is taking place.
• All personnel working on the site are made aware of the tree protection plan and arboricultural method statements covering any activities they will undertake. This duty includes delegating the task of briefing personnel in the absence of the site manager.
• The tree protection measures are left in place until the construction phase of development is completed, except with the written consent of the LPA.
• Site personnel are updated of any approved changes or variations to the approved tree protection measures.
• All personnel must work in accordance with this document at all times, or in accordance with approved variation.

2.3 PROCEDURES FOR INCIDENTS

2.3.1 If any breach of the approved tree protection measures occurs the site manager must:

• The Local Planning Authority Tree officer or other Planning Officer and the Author of this report shall be notified.
• The site manager must be informed immediately.
• Swift action must be taken to halt the breach and prevent any further breach.
• Damage mitigation measures appropriate to the scale of the incident will be deployed where required.

2.4 PROHIBITED ACTIVITIES

2.4.1 The following must not be carried out under any circumstances:

• Cutting down, uprooting, damaging or otherwise destroying any retained tree.
• Lighting a fire within 10 metres of the canopy of any retained tree.
• Equipment, signage, fencing, tree protection barriers, materials, components, vehicles or structures shall not be attached to or supported by a retained tree.
• Mixing cement, chemical toilets and other use or storage of anything that would be harmful to trees shall not take place within, or close to a Root Protection Area (RPA). The distance away from the RPA must be sufficient, and the slope of the site must be such that contamination of soil in the RPA would not occur if there were spillage, seepage or displacement.
• No plant or equipment or vehicle with a hydraulic arm such as a mini digger shall be operated within striking distance of the stem and branches or the RPA of any retained tree unless otherwise specified in this report.

2.4.2 No alterations or variations shall be made to the approved tree protection measures without written approval from the LPA.

3 PHASING & SUPERVISION

3.1 PHASING OF DEVELOPMENT

3.1.1 The development should be carried out in the following order (see table 1) unless otherwise agreed in writing with the LPA. Each step should be completed before moving onto the next.

3.1.2 The general responsibilities described in section 3 of the report must be implemented for the entire time that the site is undergoing development related works. However, the additional precautions detailed in the following arboricultural guidance notes (AGN) must be implemented at the stage indicated below.

Stage	Arboricultural Guidance Note	Associated Plan
Facilitative Tree Works	* Works should be undertaken by suitably qualified and insured arborists, in line with *'BS 3998:2010 Tree Work. Recommendations'*	Arb Site Plan (Proposed) (P4200-ASP02 V1)
Pre-Commencement	AGN1 – Installation of tree protection barriers. AGN2 – Installation of stem protection.	Tree Protection Plan (P4200-TPP01 V1)
Site Clearance & Demolition		
Groundworks & Installation of Foundations	* Modification to the layout of tree protection barriers and ground protection. AGN3 – Installation of foundations for shed and greenhouse. AGN4 – Installation of foundations for decking. AGN5 – Installation of no-dig 3D cellular surfacing.	Tree Protection Plan (P4200-TPP01 V1)
Construction		
Removal of Tree Protection Measures	* Tree protection measures may be removed	
Landscaping		

Table 1 – Timing and implementation of specific arboricultural measures

3.1.3 Failure to abide by the above schedule may result in a breach of planning. Any deviation from the agreed upon protection measures must be reported to the project arboriculturalist immediately.

3.1.4 In addition to the phasing of the scheme's implementation the activities listed in Appendix 3 require supervision/sign-off by the appointed Arboricultural Clerk of Works (ACOW). Where indicated, remote video call or

photographic supervision may be suitable in some instances.

4 TREE WORKS

4.1 TREE WORK REQUIREMENTS

4.1.1 The following tree work should be undertaken following acceptance of planning permission. These works should be undertaken by suitably qualified and insured arborists.

4.1.2 Work specification:

Ref.	Species	Development Related Tree Works	Cat.
T2	Fraxinus excelsior (Ash)	Crown lift tree by up to 3 meters to allow clearance with shed.	B2
T3	Aesculus hippocastanum (Horse chestnut)	Crown lift tree by up to 3 meters to allow clearance with shed and greenhouse.	B2
T6	Fraxinus excelsior (Ash)	Remove	U
T8	Laburnum anagyroides (Common laburnum)	Remove	C1
T9	Crataegus monogyna (Hawthorn)	Remove	C1

Table 2 – Facilitation Tree Works

4.1.3 The location of the trees can be seen on the Arboricultural Site Plan (P4200-ASP02). Trees selected for removal will be shown with a red dotted canopy fill.

5 ARBORICULTURAL GUIDANCE NOTES

AGN1 – INSTALLATION OF TREE PROTECTION BARRIERS

OUTLINE

Tree protection barriers must be installed so as to ensure that damage does not occur to the rooting areas, stems, and canopies of retained trees.

INSTALLATION METHODOLOGY

i) The barriers shall be installed and removed in accordance with the timing of operations in section 4.1 and laid out in accordance with the appended Tree Protection Plan.

ii) The "CEZ Notice" provided, should be used to create weather-proof notices that must be attached to the tree protection barriers at suitable intervals.

iii) If any panel or support becomes damaged, immediate reinforcement must occur by adding panels in, compliant with the specification detailed below.

iv) The default heavy-duty tree protection barrier specification is a vertical and horizontal scaffold framework, braced to resist impacts, as per *Figure 1*. The vertical tubes are spaced at a maximum interval of 3 metres and these are driven securely into the ground. Welded mesh panels are securely attached to the frame. During installation, it is important to consider the position of below ground services and structural roots, which must not be damaged. Where these constraints prevent the use of this specification, an alternative specification is given below.

v) Alternative heavy-duty tree protection barrier design - 2-metre-tall welded mesh panels standing in rubber or concrete feet joined using a minimum of two anti-tamper couplers installed, so they can only be removed from inside the protected area. The fence couplers should be at spaced least 1 metre apart, but uniformly across the whole barrier. These panels must be supported within the protected area with struts attached to a base plate secured by ground pins as per *Figure 2a*.

vi) Where the fencing is installed above retained hard surfacing and/or it is otherwise not feasible to use ground pins (e.g. due to underlying services or structural roots), the struts can be mounted on a block tray as per *Figure 2b*.

vii) Arboricultural Sign-off – Following the installation of the barriers, the project's arboricultural expert must confirm that they have been correctly laid out.

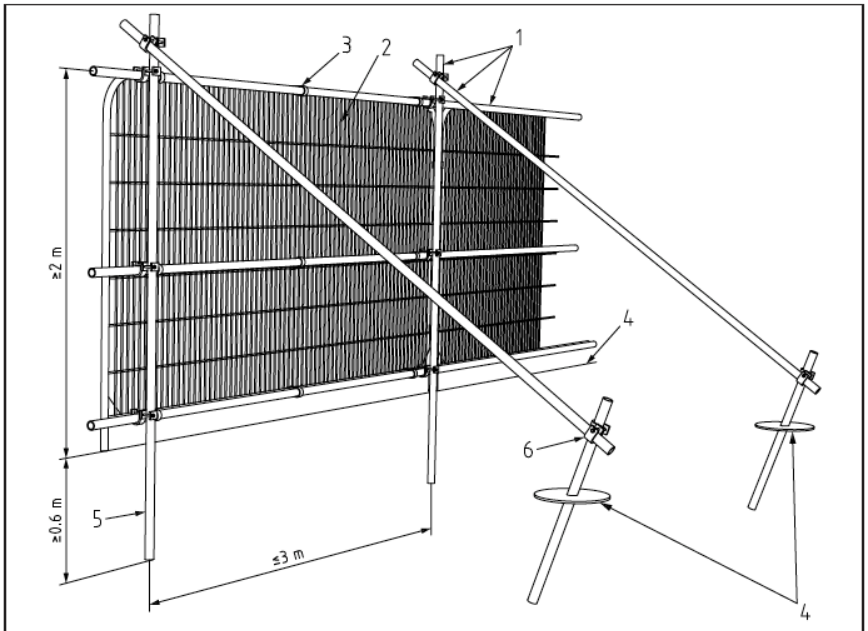

Key

1 Standard scaffold poles
2 Heavy gauge 2 m tall galvanized tube and welded mesh infill panels
3 Panels secured to uprights and cross-members with wire ties
4 Ground level
5 Uprights driven into the ground until secure (minimum depth 0.6 m)
6 Standard scaffold clamps

Figure 1 – Conventional tree protection barrier specification (source - BS 5837:2012 Section 6)

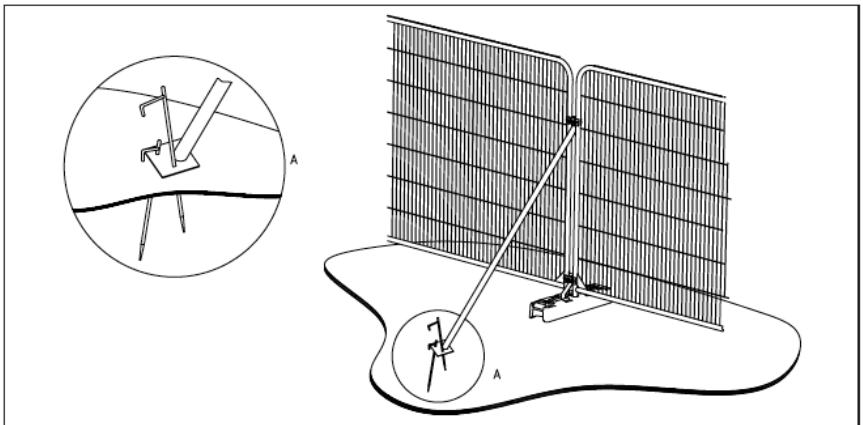

a) Stabilizer strut with base plate secured with ground pins

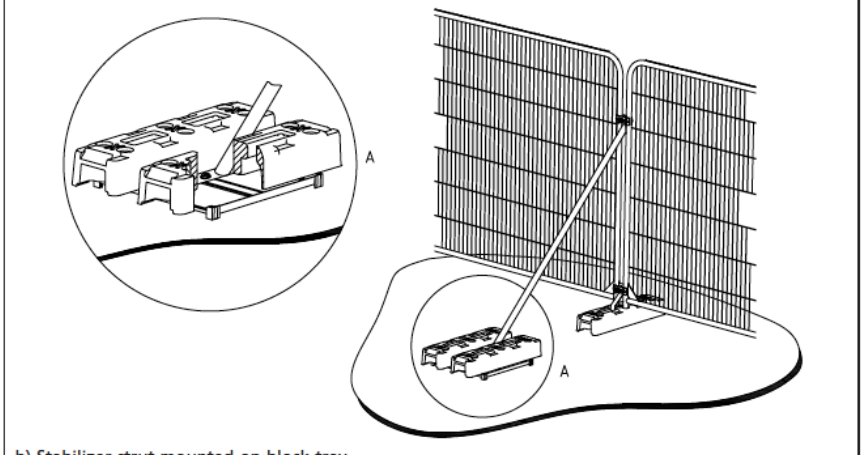

b) Stabilizer strut mounted on block tray

Figure 2 – Above ground stabilising systems (source - BS 5837:2012 Section 6)

AGN2 – INSTALLATION OF STEM PROTECTION

OUTLINE

Where demolition or construction work is to occur near to the stem of a retained tree, stem protection hoarding must be installed.

INSTALLATION METHODOLOGY

i) Plastic drainage pipe (>100mm diameter), or similar, should be loosely coiled around the stem of the tree and tied in position.

ii) A freestanding, wooden clad framework of scaffold or wood should be constructed around the tree stem; this must not be attached to the tree directly.

iii) Once erected, this should be signed-off by the project's arboricultural consultant.

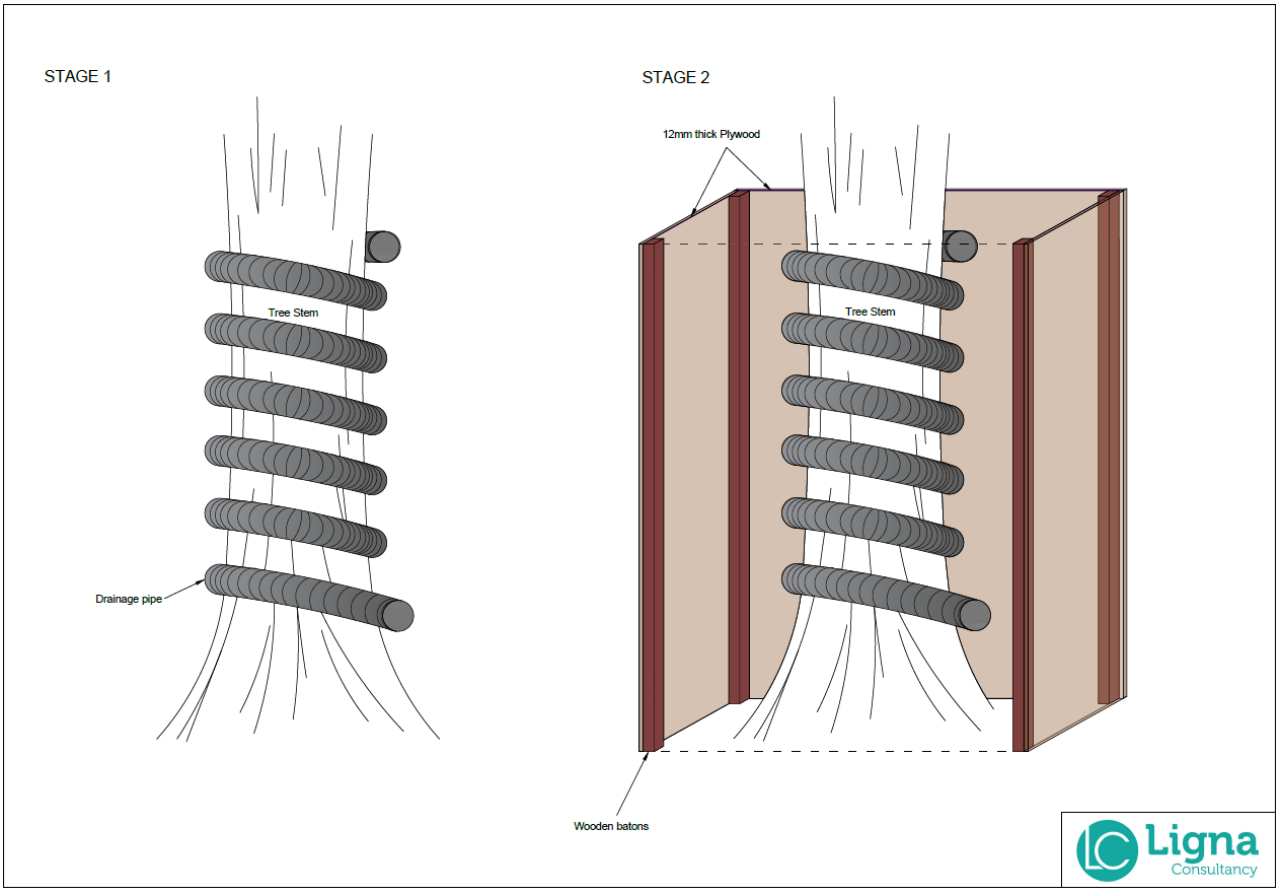

Figure 3 – Stem Protection Diagram

AGN3 – INSTALLATION OF FOUNDATIONS FOR SHED AND GREENHOUSE

OUTLINE

Owing to the positioning of the proposed shed and greenhouse, the excavations for the foundations would result in RPA incursions of 7% to T2 (for shed), 2% to T3 (for greenhouse, 9% to T3 (for shed) if traditional methods were used. Therefore, to avoid the need for excavation into the rooting areas, a specialist no-dig surfacing is to be used as the subbase.

A no-dig 3D cellular system allows for robust surfacing/foundations to be installed within a root protection area without harming the roots and overall health of retained trees. These systems ensure that minimal soil compaction occurs during installation and use.

Owing to the nature of no-dig surfacing, the FSL of the area will be increased by 100mm. Owing to this, areas of adjacent existing surfacing will also need to be raised by 100mm, this needs to be taken into consideration by the design team.

The selected system must be installed as per the manufacturer's instructions. The following guidance is intended as an outline only.

INSTALLATION METHODOLOGY

i) Ground protection or tree protection barriers may be removed in the areas that are to be surfaced. Once removed, no machinery or vehicles may be present on the unprotected ground at any time.

ii) A geotextile membrane will be laid over the area to be surfaced (see manufacturer's recommendations).

iii) The cellular system (100mm Cellweb TRP) will be spread out and pinned into the ground. Wooden edge retention boards will then be pinned into place.

iv) The pinned down geocells must then be filled with a 40-20mm clean angular stone (see manufacturer's recommendations). This will be achieved with any machinery working forward onto the surface as it is constructed (known as "rolling out").

v) Once installed, the system will have a finishing surface added above (see figure 5).

AGN4 – INSTALLATION OF FOUNDATIONS FOR DECKING

OUTLINE

Owing to the positioning of the proposed decking, the excavations for the foundations will cause a minor incursion of 2% in the RPA of T4. Owing to the small scale of this incursion no specialist methods are deemed necessary.

However, to prevent damage from occurring, the following methodology must be used:

INSTALLATION METHODOLOGY

i) During the excavations, should any roots >20mm in diameter be discovered, they must be pruned by the projects arboriculturalist.

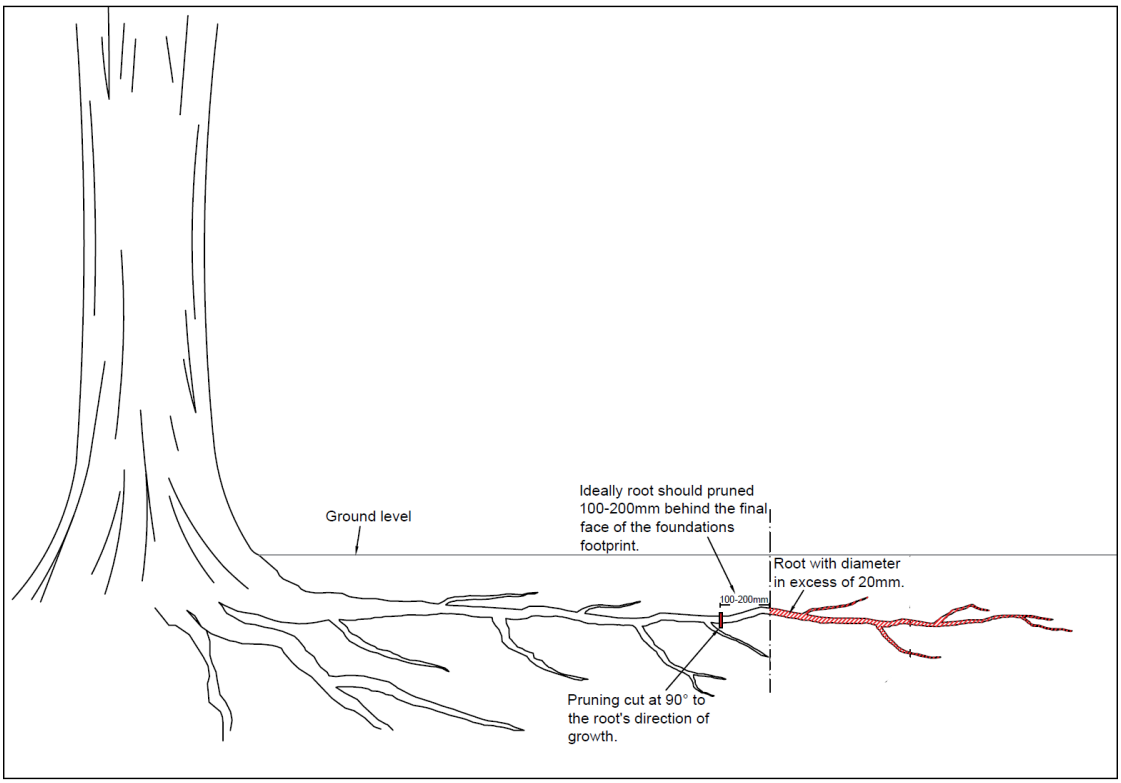

Figure 4 - Root pruning diagram

AGN5 – INSTALLATION OF NO-DIG 3D CELLULAR SURFACING

OUTLINE

New surfacing is to be installed within multiple RPAs that has the potential to cause significant root loss and disturbance if traditional construction methods are used. Therefore, to avoid the need for excavation into the rooting areas, a specialist no-dig surfacing is to be used as the subbase.

A no-dig 3D cellular system allows for robust surfacing to be installed within a root protection area without harming the roots and overall health of retained trees. These systems ensure that minimal soil compaction occurs during installation and use.

Owing to the nature of no-dig surfacing, the FSL of the area will be increased by 100mm. Owing to this, areas of adjacent existing surfacing will also need to be raised by 100mm, this needs to be taken into consideration by the design team.

The selected system must be installed as per the manufacturer's instructions. The following guidance is intended as an outline only.

INSTALLATION METHODOLOGY

i) Ground protection may be removed in the areas that are to be surfaced. Once removed, no machinery or vehicles may be present on the unprotected ground at any time.

ii) A geotextile membrane will be laid over the area to be surfaced (see manufacturer's recommendations).

iii) The cellular system (100mm Cellweb TRP) will be spread out and pinned into the ground. Wooden edge retention boards will then be pinned into place.

iv) The pinned down geocells must then be filled with a 40-20mm clean angular stone (see manufacturer's recommendations). This will be achieved with any machinery working forward onto the surface as it is constructed (known as "rolling out").

v) Once installed, the system will have a finishing surface added above (indicative cross section below)

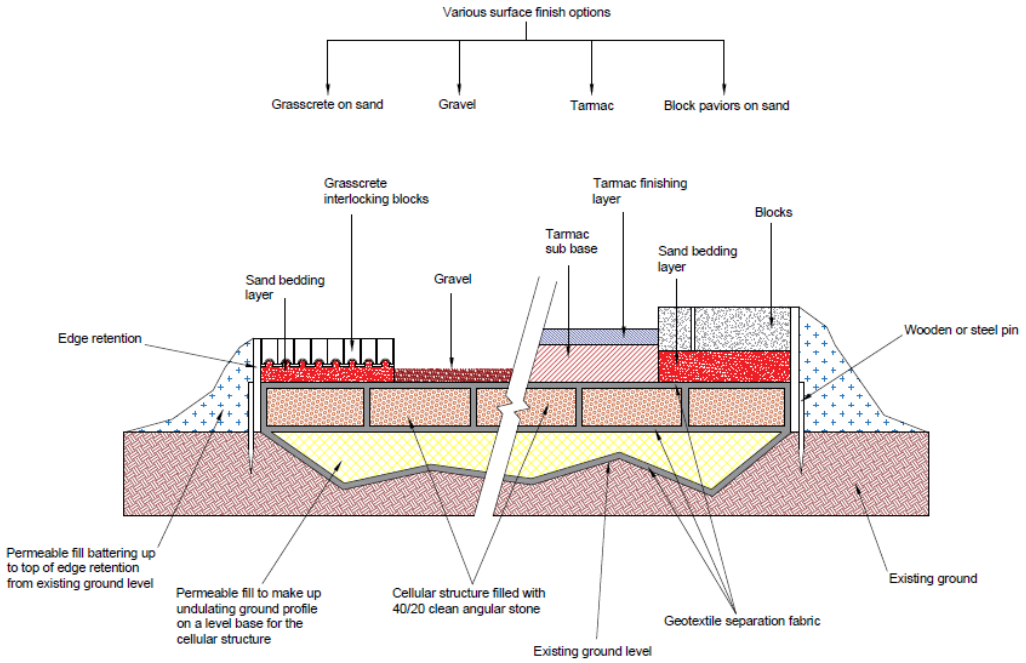

Figure 5 - Diagram showing the methodology behind the installation of three-dimensional cellular matting (Cellweb)

RECOMMENDED PRODUCTS

Product Type	Product Name	Supplier	Website
3D Cellular Confinement System	Cellweb TRP	Geosynthetics	http://www.geosyn.co.uk/product/cellweb-tree-root-protection

6 APPENDICES

6.1 APPENDICES

6.1.1 The following appendices should be used in conjunction with this document:

No.	Appended Document
1	Tree Protection Plan (P4200-TPP01 V1)
2	CEZ Notice
3	Schedule of Arboricultural Supervision

APPENDIX 1
TREE PROTECTION PLAN

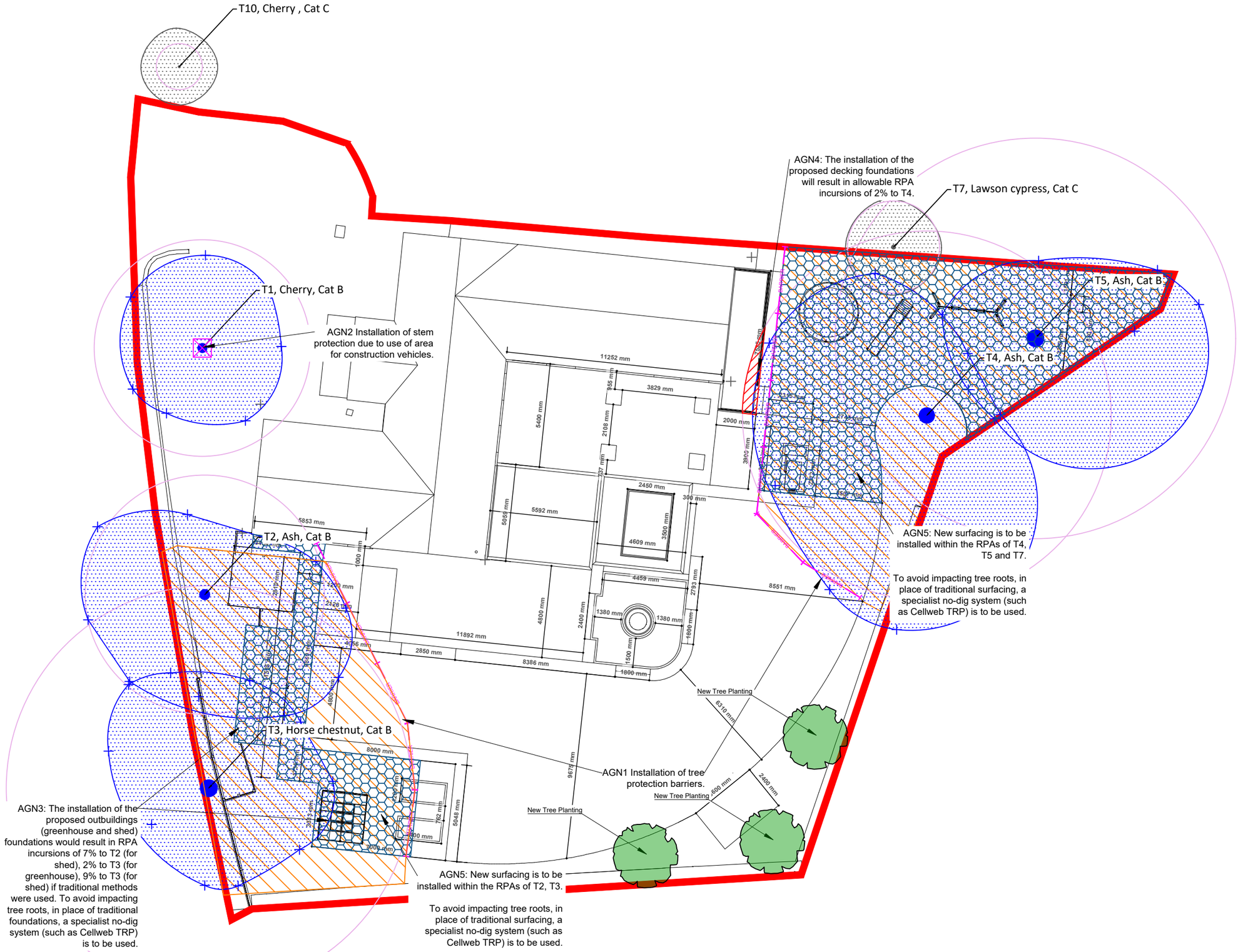

Use of This Document

This document should be **viewed in conjunction with the relevant arboricultural method statement** and must be implemented as stated for the duration of the site's development. Failure to do so may result in a breach of planning, and damage to protected trees; potentially resulting in fines. Any queries regarding the trees on site should be addressed by Ligna Consultancy Ltd: 01284 598008 / info@lignaconsultancy.co.uk

Root Protection Areas

The enforcement of root protection areas (RPAs) is vital for the successful retention of a site's trees during the development process. RPAs that are not covered by ground protection must not be subjected to the following activities unless otherwise stated within the Tree Protection Plan or Arboricultural Method Statement:

- materials storage
- pedestrian / vehicular movement
- excavation or soil level increase
- installation of new surfacing
- car parking
- mixing of cement
- any other infringement

RPA

Should any issues arise from the enforcement of root protection areas restricting necessary site works, the site manager should be informed, and the project's arboriculturalist contacted.

Incursions within RPAs

Excavation

Arb. Sensitive Demolition / Removal

Specialist Foundations/Surfacing and Site Features

Specialist Foundations

Pile / Screw Pile

Cellweb TRP

Demolished Building

Tree Protection Measures (Refer to Technical Specification)

Barriers - Stake and Mesh

Barriers - Metal Fencing

Barriers - Metal (Secondary

Stem Protection (Positioning) Hoarding

Construction Exclusion Zone

Temporary Ground Protection

Ligna Consultancy

Project: Spillers Yard

Client: Shelford Tree Services Ltd

Drawing: Tree Protection Plan

Drawing Ref:	Rev:	Date:
P4200-TPP01	V1	20/12/2024

Scale:	Drawn By:
1:200 - A3	Alistair Godfrey

Based on: 3. Existing and Proposed site plan-compressed

All dimensions should be checked on site. No dimensions to be scaled from this drawing. Please notify us of any discrepancies found. Ligna Consultancy Ltd. cannot be held responsible for inaccuracies in the base drawing in which this plan is based. This drawing is designed to reflect the principles of the layout or design only, and relates only to the protection of retained trees.

An architect or structural engineer should be contacted over any matters of construction, detailing or specification and for any standards or regulatory requirements relating to proposed structures, hard surfacing or underground services.

This drawing was produced in colour - a monochrome copy should not be relied upon.

© Ligna Consultancy Ltd. 2024

APPENDIX 2
CEZ NOTICE

NO ENTRY



CONSTRUCTION EXCLUSION ZONE

This area contains trees which must be protected as part of the planning permission. Additional legal protection may also apply e.g. a Tree Preservation Order.

Removing or damaging trees in this area may be a breach in planning permission. Damage to protected trees may lead to a criminal conviction and / or a fine.

Should any issues arrive regarding the tree protection or its layout, please contact Ligna Consultancy Ltd for advice:

info@lignaconsultancy.co.uk
01284 598008

APPENDIX 3
SCHEDULE OF SUPERVISION

APPENDIX 3 – SCHEDULE OF ARBORICULTURAL SUPERVISION

Date: **Planning Ref:**

This statement is to confirm that …… of …….. has undertaken the following supervision activities for the development at Project; ensuring that any deviation from the approved tree protection scheme is recorded and appropriate action is undertaken.

Liability for any failure of compliance will remain with the client.

Arboricultural Sign-Off

The correct installation of the approved tree protection measures must be confirmed by the project's arboriculturalist in the table below. No further demolition or construction activities may occur until approval has been given by the project's arboriculturalist.

Failure to abide by the following schedule may result in a breach of planning. Any deviation from the agreed upon protection measures must be reported to the project arboriculturalist immediately.

Activity	Type of Supervision	Date	Protection Measures Compliant	Remedial Action Required
Pre-Start meeting with project manager to discuss tree protection requirements	Remote			
Installation of stem protection.	Remote			
Installation of foundations for decking.	Pre-start toolbox talk, on-site			
Installation of foundation for a shed and greenhouse – CELL WEB TRP.	Pre-start toolbox talk, on-site			
Installation of new surfacing within an RPA – CELLWEB TRP.	Pre-start toolbox talk, on-site			
Removal of stem protection.	Remote			
Removal of tree protection barriers.	Remote			

W. www.lignaconsultancy.co.uk
E. info@lignaconsultancy.co.uk
T. 01284 598008

This report was prepared for use by the Clients and their contractors for planning and design purposes. The report and its appendices may not be copied, modified, or distributed beyond the necessary parties without the written consent of Ligna Consultancy Ltd